CORNING

Enhanced Management Frame Fiber Retainer

p/n SRP 000-264, Issue 1

revision history |

Issue	Date	Reason for Change
1	07/2008	Initial release

1. General

This document describes the installation of a fiber retainer which prevents fiber from being pulled up out of the trough on the rear of an Enhanced Management Frame.

2. Carton Contents

(6) Fiber Retainer Kits

3. Tools and Materials Required

Phillips-head screwdriver

4. Installation

Step 1: Insert screw partially into threaded insert as seen in the illustration inset.
Step 2: Locate retainer at edge of any trough or center upright as shown.
Step 3: Tighten screws against trough or center upright.
Step 4: Snap radius guide on underside of retainer.

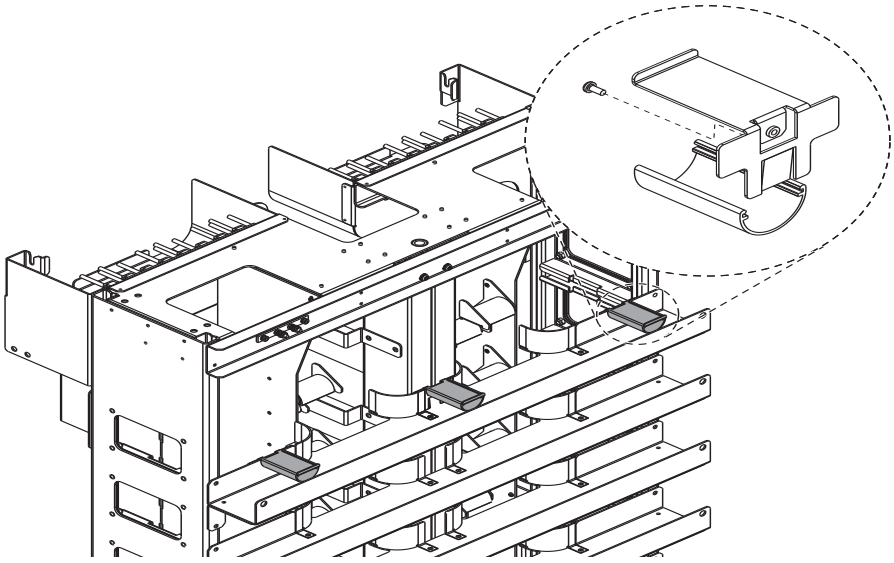

Corning Cable Systems LLC • PO Box 489 • Hickory, NC 28603-0489 USA
1-800-743-2671 • FAX +1-828-325-5060 • International +1-828-901-5000 • http://www.corning.com/cablesystems

Corning Cable Systems reserves the right to improve, enhance, and modify the features and specifications of Corning Cable Systems' products without prior notification. All trademarks are the properties of their respective owners. Corning Cable Systems is ISO 9001 certified.
© 2008 Corning Cable Systems. All rights reserved. Published in the USA.