CORNING

Mid-span Access Kit for Optical Splice Enclosure (OSE-A288)

P/N 003-353
Issue 5

related literature | Search www.corning.com/opcomm. Click on "Resources."

1. General

This instruction describes installation of a Mid-span Access Kit (p/n OSE-A288-MSPN-KIT) into Optical Splice Enclosure (OSE-A288). Contact your customer service representative to purchase accessories that are sold separately or to request assistance.

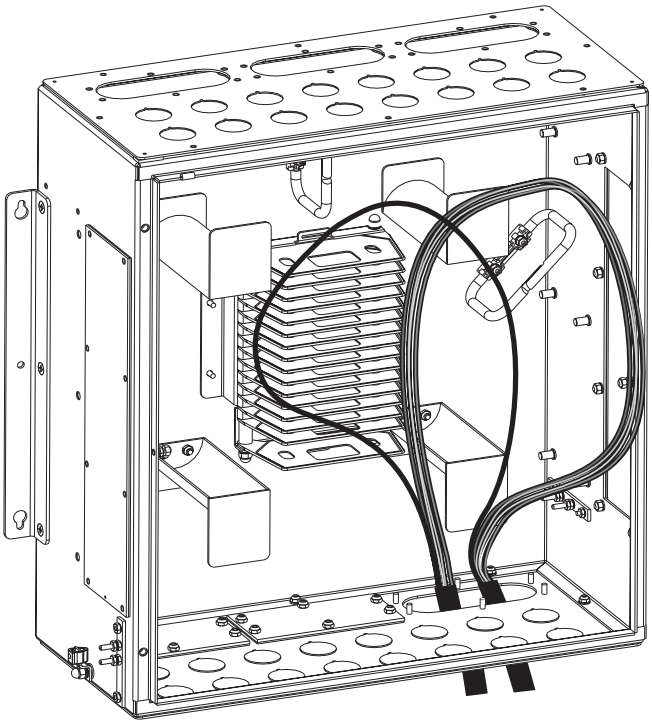

Figure 1

2. Prepare Cable

WARNING: Never look directly into the end of a fiber that may be carrying laser light. Laser light can be invisible and can damage your eyes. Viewing it directly does not cause pain. The iris of the eye will not close involuntarily as when viewing a bright light. Consequently, serious damage to the retina of the eye is possible. Should accidental eye exposure to laser light be suspected, arrange for an eye examination immediately.

WARNING: DO NOT use magnifiers in the presence of laser radiation. Diffused laser light can cause eye damage if focused with optical instruments. Should accidental eye exposure to laser light be suspected, arrange for an eye examination immediately.

CAUTION: Cleaved or broken glass fibers are very sharp and can pierce the skin easily. Do not let these pieces of fiber stick to your clothing or drop in the work area where they can cause injury later. Use tweezers to pick up cleaved or broken pieces of glass fibers and place them on a loop of tape kept for that purpose alone. **Good housekeeping is very important.**

CAUTION: Fiber optic cable is sensitive to excessive pulling, bending, and crushing forces. Consult the cable specification sheet for the cable you are installing. Do not bend the cable more sharply than the minimum recommended bend radius. Do not apply more pulling force to the cable than specified. Do not crush the cable or allow it to kink. Doing so may cause damage that can alter the transmission characteristics of the cable; the cable may have to be replaced.

CAUTION: Recommend the use of safety glasses (spectacles) conforming to ANSI Z87, for eye protection from accidental injury when handling chemicals, cables or fiber. Pieces of glass fiber are very sharp and have the potential to damage the eye.

CAUTION: The wearing of cut-resistant safety gloves to protect your hands from accidental injury when using sharp-bladed tools and armored cable is strongly recommended. Use extreme care when working with severed armor. There will be a sharp edge where armor is cut. To minimize the chance of injury from the cut armor, cover the exposed edge with a wrap of electrical tape. To minimize the chance of injury from sharp-bladed tools, always cut away from yourself and others. Dispose of used blades and armor scrap properly.

Remove cable sheath as described in the sheath removal instructions for the cable you are installing.

Step 1: Remove 4 meters (160 in) of the cable sheath (and armor, if included) as indicated in Figure 2.

Step 2: Cut the central member of each cable to 7.5 cm (3 in) from the sheath using side cutters.

Step 3: Leave an excess length of yarn (approximately 4 in) for additional strain-relieving.

IMPORTANT: *Do not expose the bare fibers until after the cables have been placed in the enclosure.*

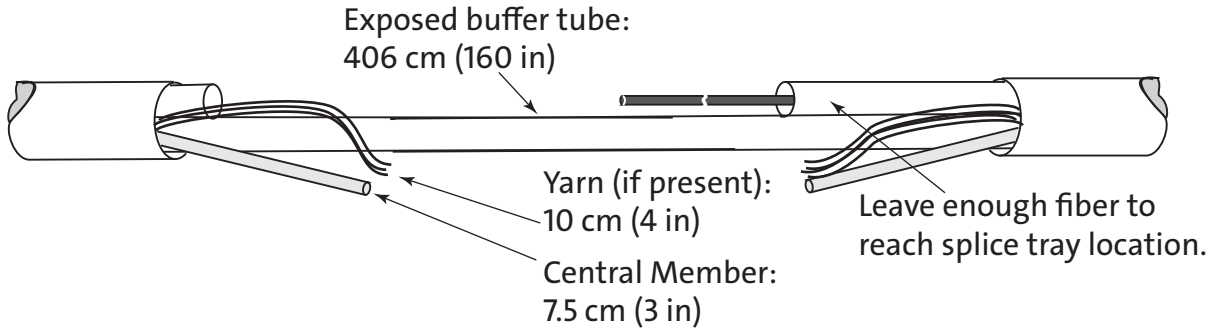

Figure 2

3. Ground Armored Cables

Using the hardware in the accessory kit as shown in Figure 3, ground the armored cable.

a. Cut a slit into opposite sides of the outer sheath and armor about 2.5 cm (1 in). To do this, score the armor with a cable knife (being careful not to damage the inner sheath) and split the sheath by flexing it.

b. Position the grounding clamp base plate under the armor. The stops of the clamp should just touch the outside of the armor and sheath. Tap the sheath above the ground clamp base to drive the teeth on the plate into the cable sheath.

c. Position the top plate and lock nut on the outer sheath over the base plate. Tighten with a 3/8-in wrench so that the teeth on the upper plate are driven into the sheath.

d. Wrap the grounding clamp and split portion of the cable sheath with vinyl tape.

e. Place the eyelet on the ground wire over the stud on the base plate. Add a second lock nut and tighten using a 3/8-in wrench.

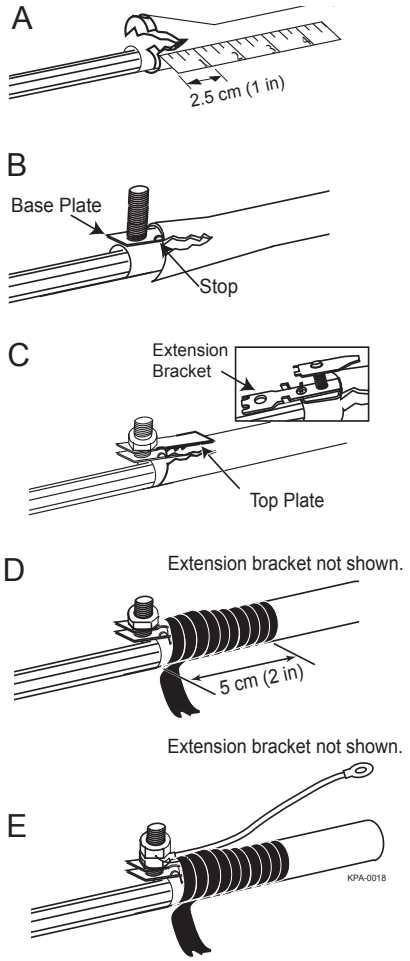

Figure 3

4. Install Cable

4.1 Prepare Enclosure

Step 1: Remove a cover plate from the cable entry opening. Do not remove or damage gasket. Set hardware aside for later use.

Step 2: Loop the buffer tubes carefully and feed them through the cable entry opening (Figure 4 - only one slack loop shown for clarity).

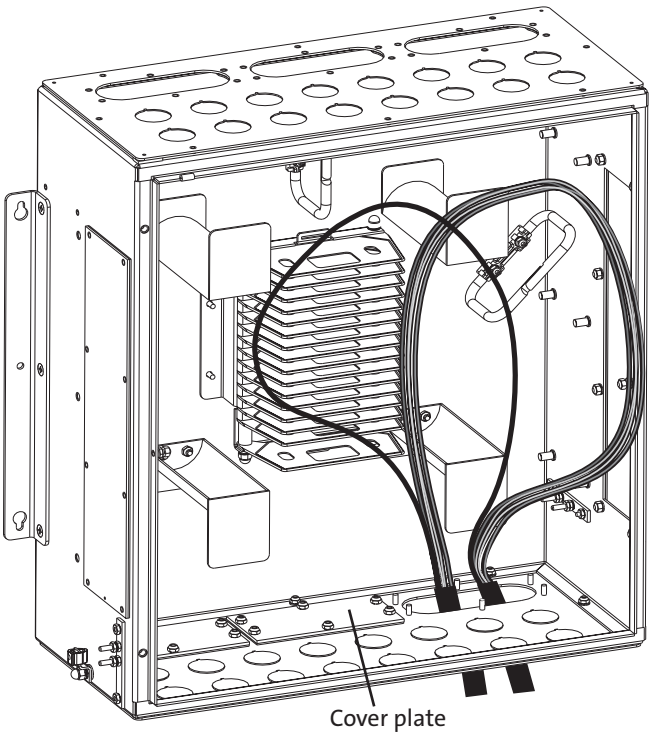

Figure 4

4.2 Strain-Relieve Cables

Step 1: Position peelable grommets from kit around cable sheath approximately 2 in from the end of the sheath. Remove enough interior layers of the grommets to allow them to fit snugly around the cables.

Step 2: Secure grommets around cables using hose clamps (Figure 5).

Step 3: Install the gasket removed in Section 4.1.

Step 4: Slide the slip plates into the channels on the edges of the grommets. (The slip plates are interchangable.) Fasten slip plates together using the two center nuts (Figure 5).

Step 5: Install the strain-relief bracket onto the four studs at the corners of the slip plates using the hardware removed in Section 4.1.

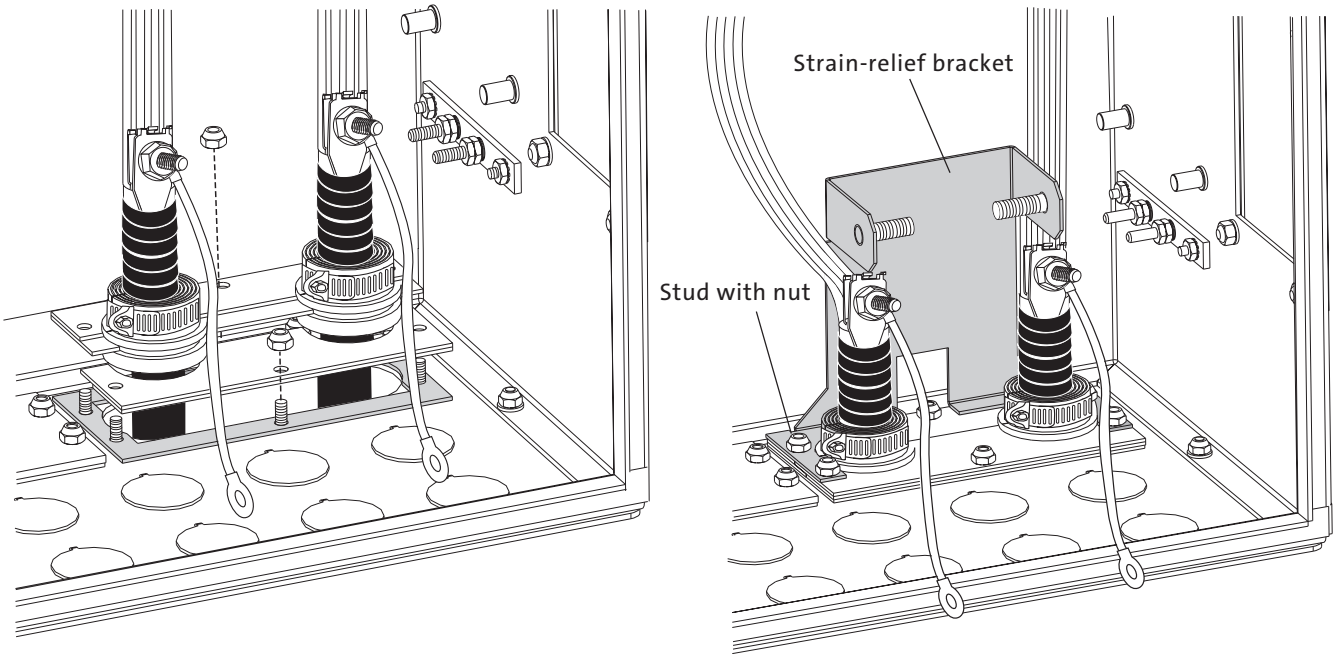

Figure 5

4.3 Strain-Relieve Central Member

Step 1: Position the central member between the square washer and the strain-relief bracket (Figure 6). Make sure to move the buffer tubes out of the way to prevent damaging them. trim central member, if necessary.

Step 2: Install hex nut onto bracket and tighten to secure central member.

Step 3: Install two flat washers and wrap the yarn, if present, around the stud in a clockwise direction.

Step 4: Install hex nut and tighten to secure the yarn.

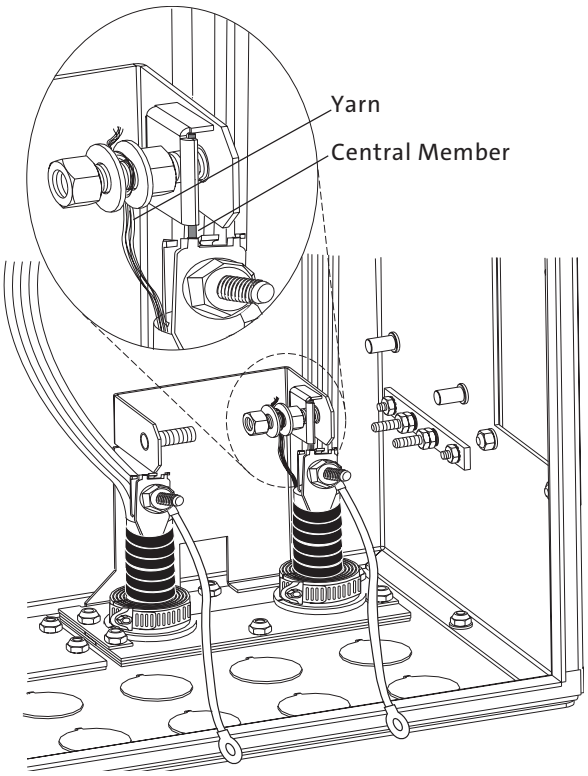

Figure 6

5. Ground Cable

Secure the end of the ground wire attached to the cable to the grounding bus bar inside the enclosure (Figure 7).

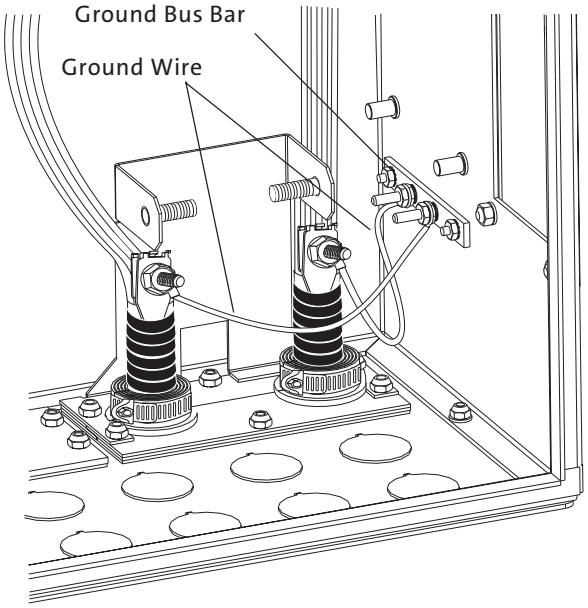

Figure 7

6. Route Cable

Step 1: Determine which buffer tubes are to be spliced and separate them from the other buffer tubes.

Step 2: Route uncut buffer tubes as shown in Figure 8.

7. Splice Fibers

CAUTION: Cleaved or broken glass fibers are very sharp and can pierce the skin easily. Do not let these pieces of fiber stick to your clothing or drop in the work area where they can cause injury later. Use tweezers to pick up cleaved or broken pieces of glass fibers and place them on a loop of tape kept for that purpose alone. **Good housekeeping is very important.**

Step 1: Position splice tray in bottom slot of tray stacker assembly.

Step 2: Route buffer tube to be spliced to the tray and mark the tube where it will enter the splice tray.

Step 3: Remove buffer tube at the mark made in Step 2.

Step 4: Secure the buffer tube to the tray as detailed in the instructions provided with the splice tray.

Step 5: Splice fibers and install tray into stacker assembly with cable routed as shown in Figure 9.

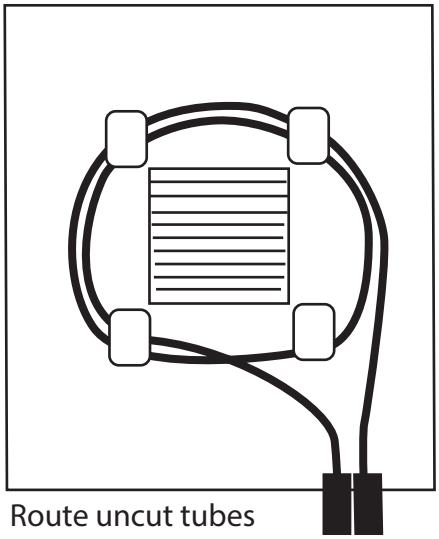

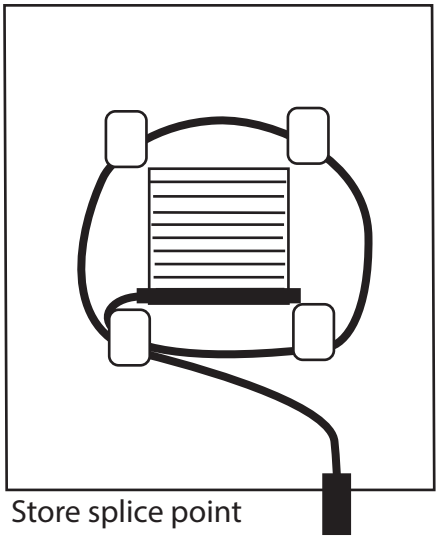

Figure 8

Corning Optical Communications LLC • PO Box 489 • Hickory, NC 28603-0489 USA
800-743-2675 • FAX: 828-325-5060 • International: +1-828-901-5000 • www.corning.com/opcomm