High Density Frame (HDF) Installation

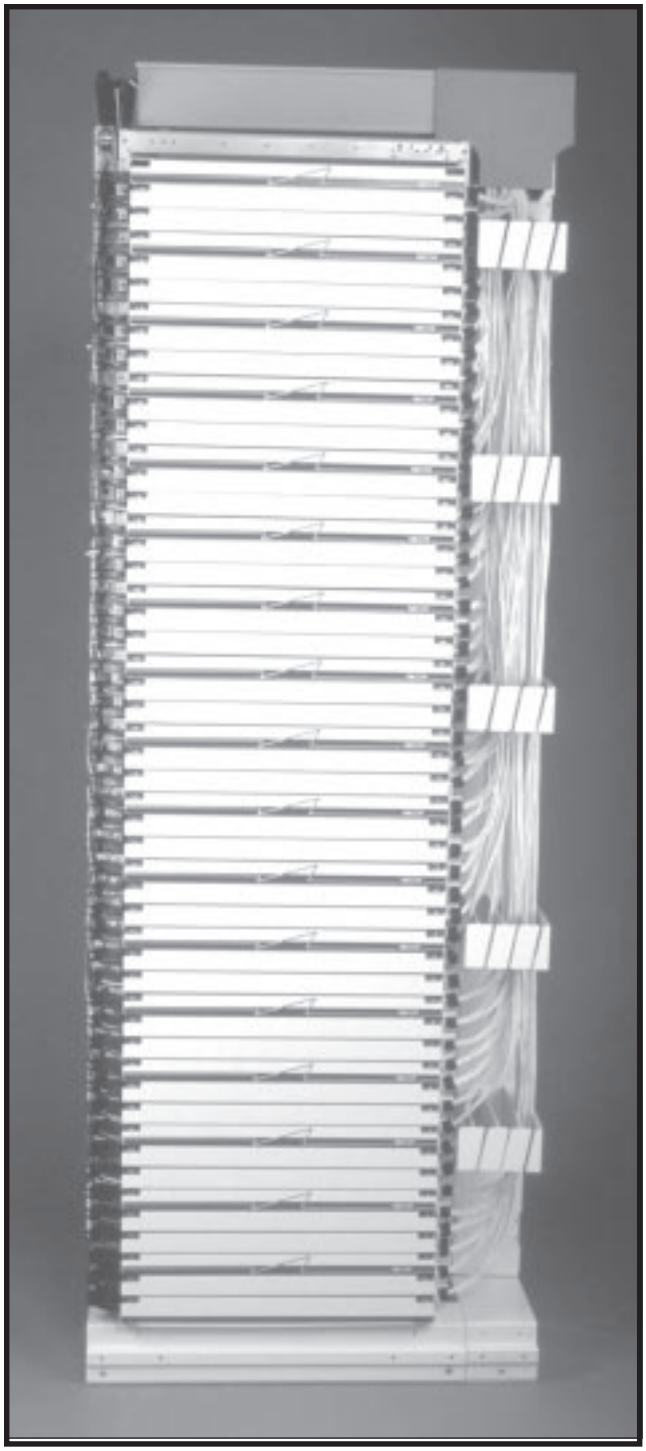

Figure 1

Contents

1. General

1.1 This document describes the installation of the High Density Frame (HDF) manufactured by Corning Cable Systems (Figure 1).

1.2 This document is being reissued to include updated corporate information.

2. Description

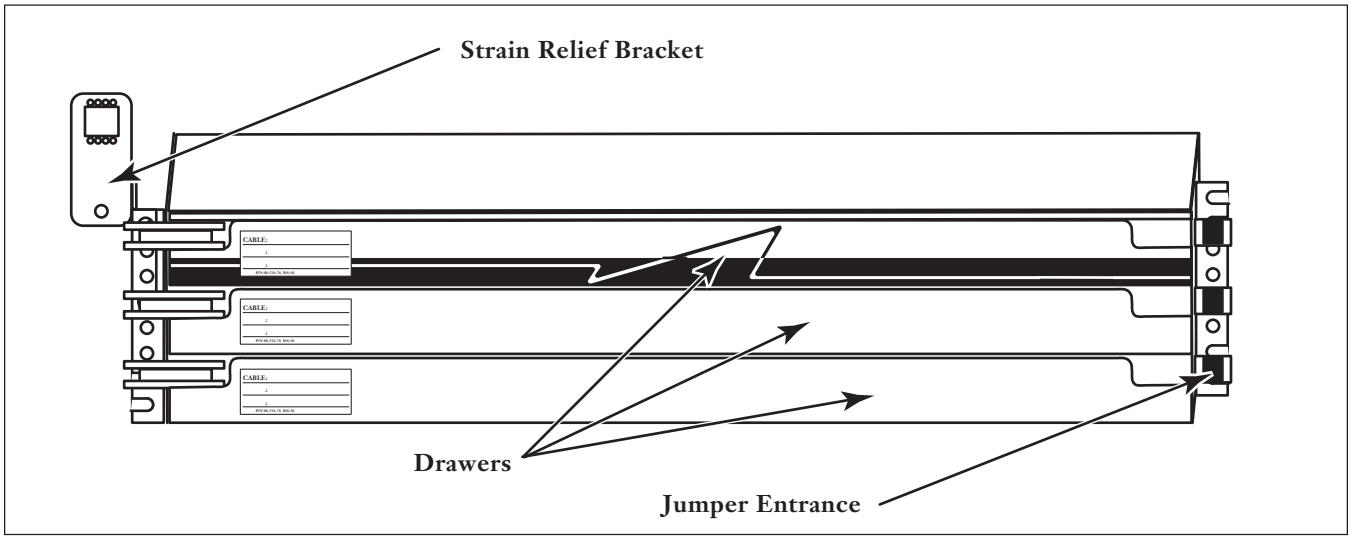

Figure 2

2.1 The HDF consists of a utility rack that holds up to 17 HDF shelves (Figure 2). Each shelf holds three drawers. Each drawer will accommodate up to 24 connectors (including in-line or built-in attenuators) and a fusion or mechanical splice tray.

2.2 The utility rack measures seven feet high. Fiber routing guides are attached to the utility rack. These are intended to facilitate good housekeeping, provide bend radius control and provide organization for jumpers.

2.3 The Corning Cable Systems HDF is designed and manufactured for CEV/Hut and CATV applications. The typical application provides an interconnect between outside plant fibers and electronic equipment. This unit allows for easy termination, rearrangement, and test access in one convenient location.

3. Tools and Equipment

The following tools and equipment are recommended for a typical HDF installation.

- 1/2-inch nut driver
- Phillips-head screwdriver
- Flat-blade screwdriver
- 15/16 socket (to attach extension)
- Cable tie installation tool

4. Utility Rack Assembly

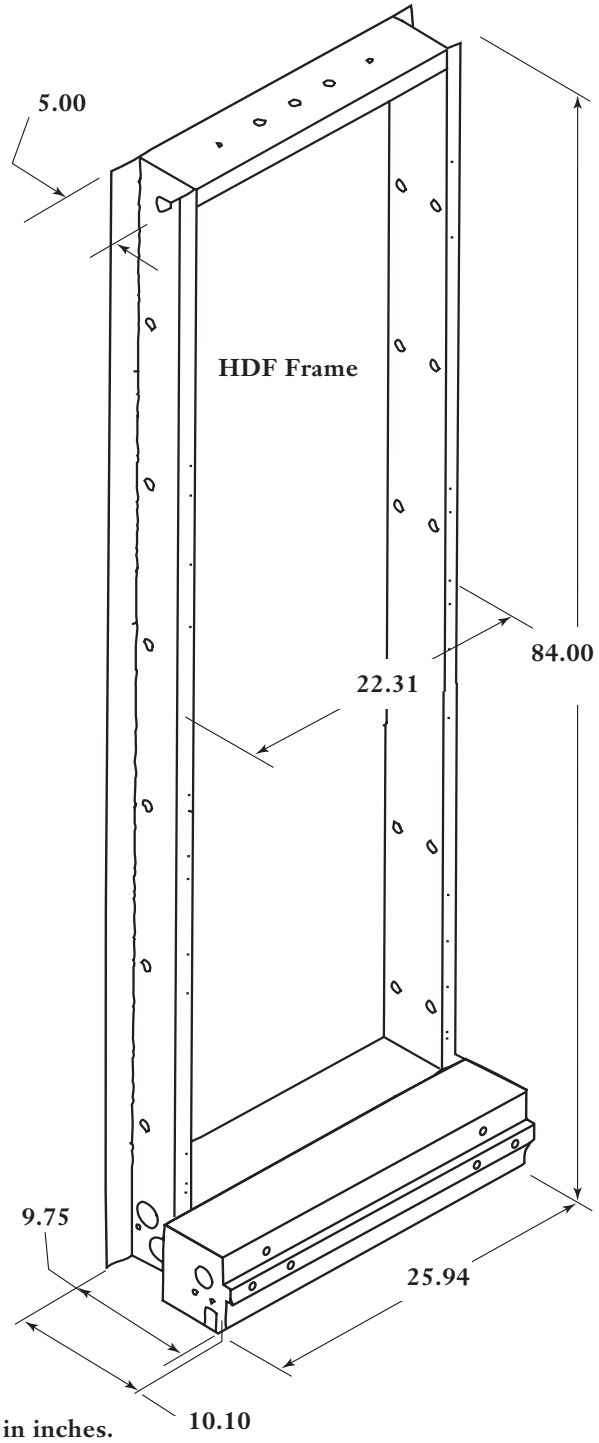

All measurements are shown in inches.

Figure 3

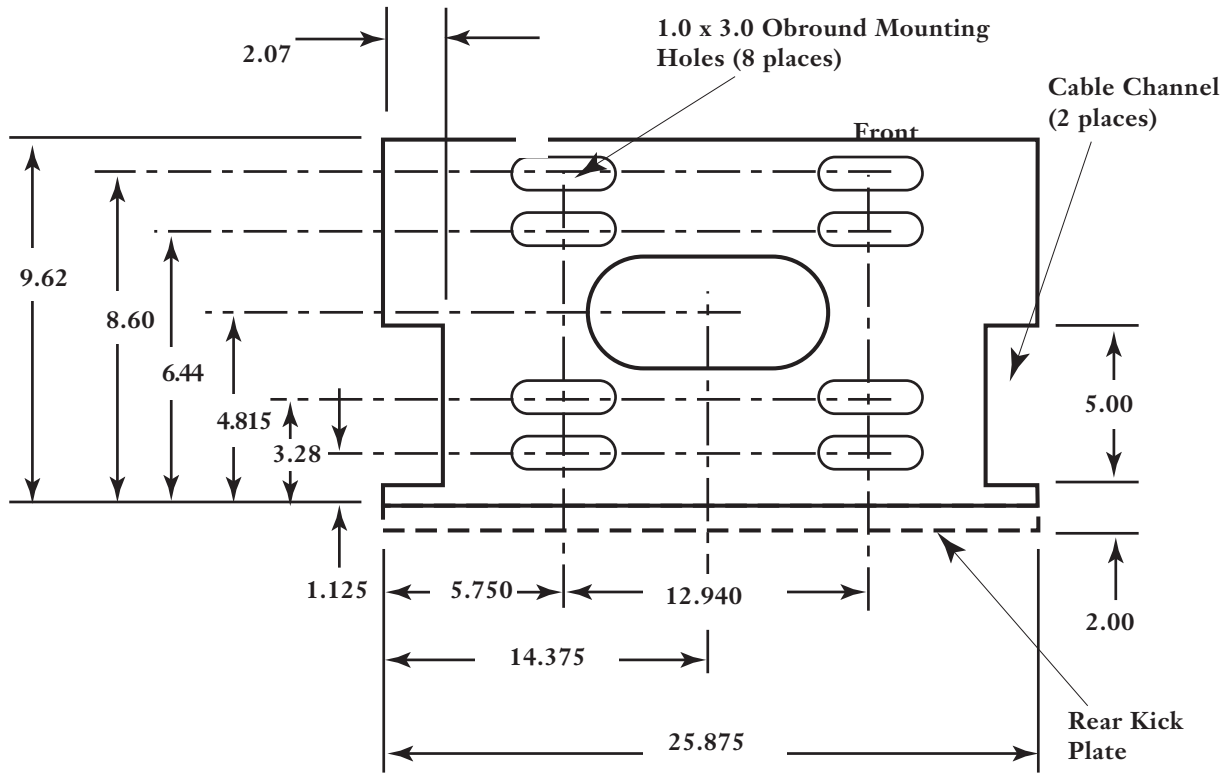

All measurements are shown in inches.

Figure 4

4.1 Make sure everything you need for the installation is at the site before you begin.

4.2 Remove the base cover from the base and save the screws (Figure 5).

4.3 Place the preassembled utility rack in the position it will occupy and mark the hole locations for drilling.

4.4 Remove the frame from placement, drill floor for anchors, and insert anchors.

4.5 Bolt the unit to the floor using anchors and assembly hardware specified for the type of floor. See Figure 4 for hole locations.

4.6 If you are installing more than one HDF (in tandem), install the interbay spacer (see next section) and attach the HDF utility racks together first. To attach the HDF utility racks together, locate the racks over the floor mounting holes, secure them to each other with nuts and bolts threaded through the bases, install the floor mounting bolts, and tighten.

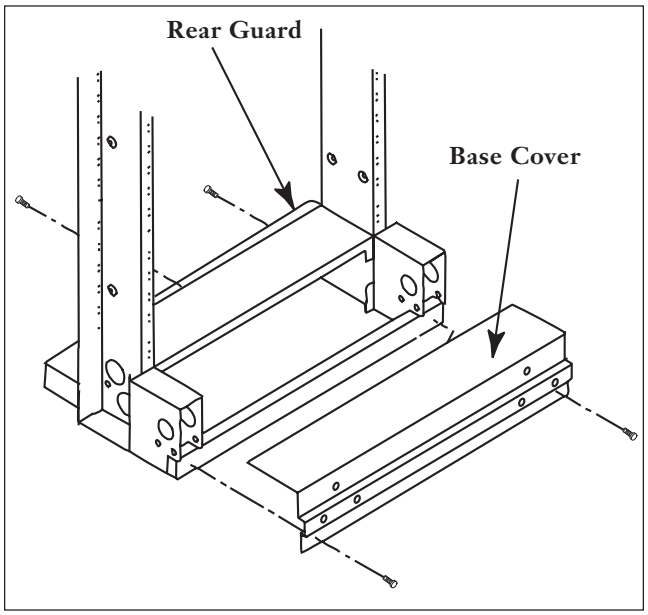

Figure 5

4.7 Attach the base cover to the rack assembly as illustrated in Figure 5.

5. Routing Guides

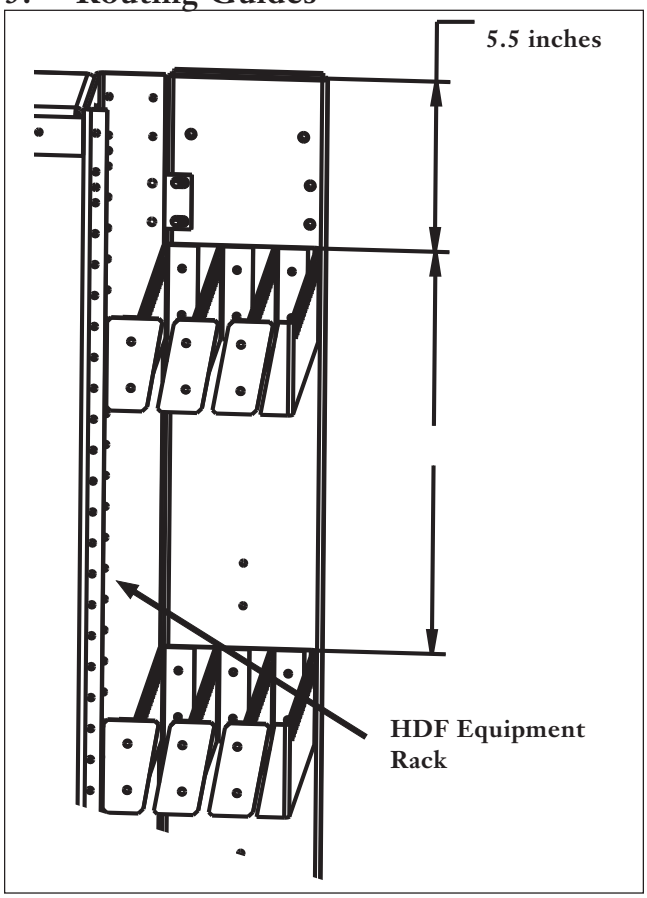

Figure 6

5.1 Jumper guides are installed on the utility rack. See Figure 6 for suggested locations. A backplate is mounted behind the jumper guides to facilitate tandem assembly (Figure 7).

5.2 Remove front cover from base filler and equipment rack base. Attach base filler to equipment rack base with 3/8-inch hardware provided. Reattach covers (Figure 8).

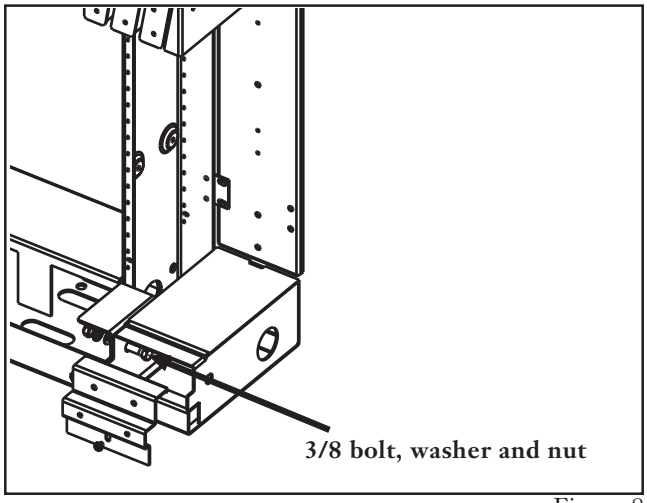

Figure 8

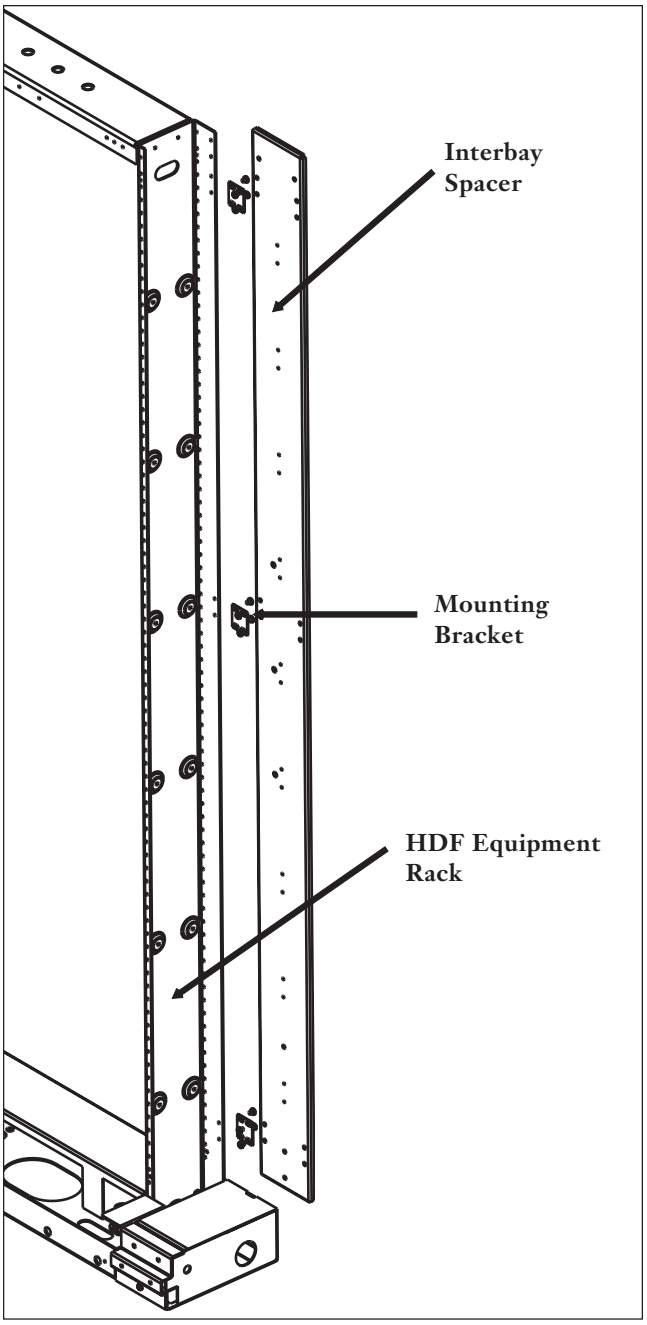

Figure 7

5.3 Each jumper guide is mounted using two (2) 12-24 x 1/4-inch screws. The top jumper guide is mounted 5.5 inches from the top of the equipment rack. Each successive jumper guide is mounted 13 inches below previous guide.

5.4 To install the jumper guide backplate, first install the three (3) mounting brackets to the back side of equipment rack upright using six (6) 12-24 x 1/4-inch screws. Position the jumper guide backplate and secure with remaining six (6) 12-24 x 1/4-inch screws.

6. Endcap Installation

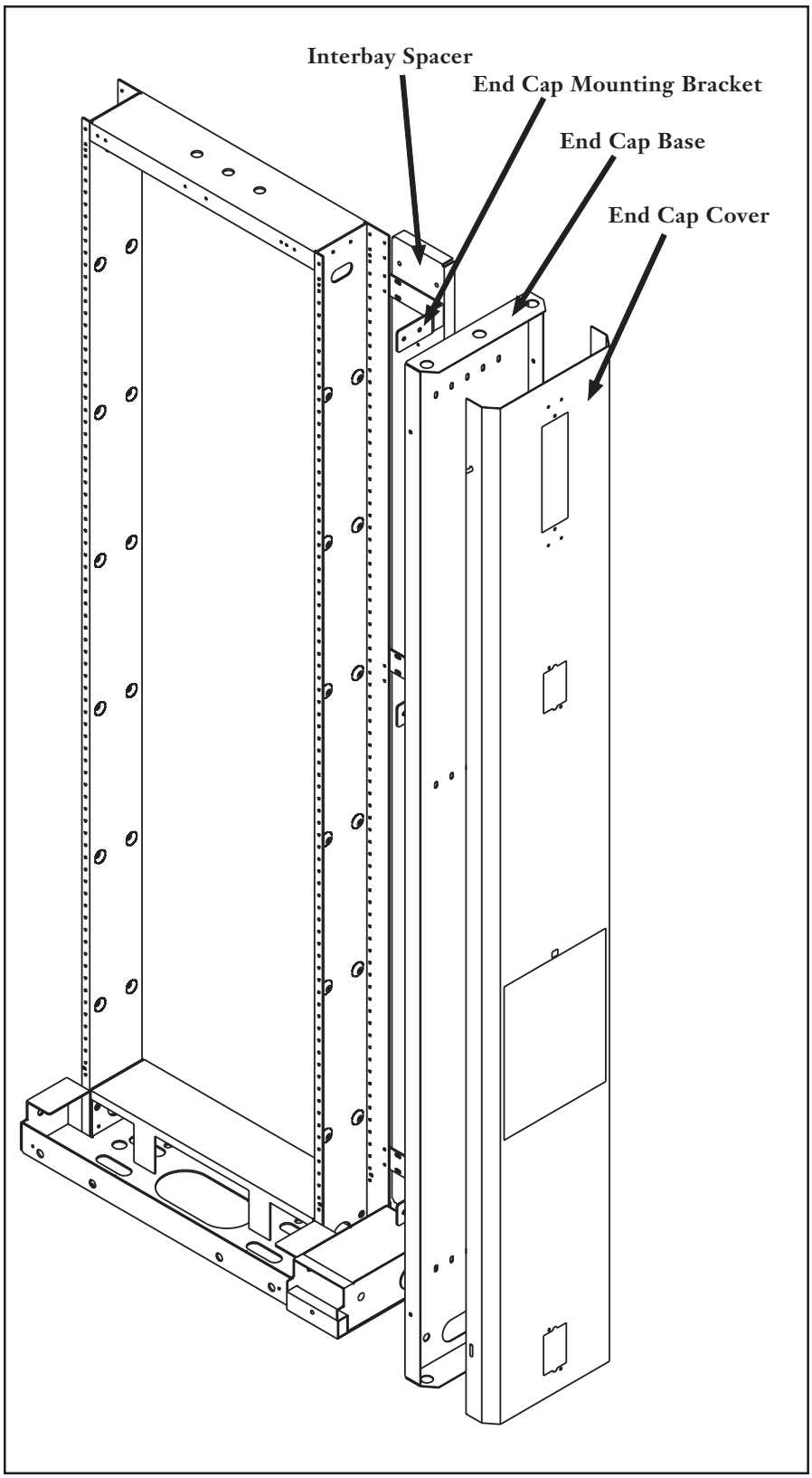

Figure 9

6.1 Endcaps are installed on the end of frame lineups to finish out the lineup and protect the exposed jumpers. The endcaps mount to the frame through the interbay spacer (Figure 9).

6.2 Remove and save the screws holding the endcap cover to the endcap base and remove the cover from the base. Remove the package of hardware from the small compartment in the endcap cover.

6.3 If an interbay spacer is already installed on the HDF frame, the spacer and its mounting brackets must first be removed from the frame. Remove the mounting brackets from the rear of the frame and then remove the brackets from the interbay spacer.

6.4 Use the large mounting brackets (3) provided with the endcap. The smaller mounting brackets may be discarded. Attach the endcap mounting brackets to the backside of the frame using two (2) 12-24 X 1/2-inch screws per mounting bracket.

6.5 Install the interbay spacer to the backside of the endcap mounting brackets using four (4) 12-24 X 1/4-inch screws per mounting bracket.

6.6 Attach the endcap base to the endcap mounting brackets using two (2) 12-24 X 1/4-inch screws per mounting bracket.

6.7 Attach bottom of endcap to base filler using 3/8-inch bolt, washers, and nut provided.

6.8 Reattach the endcap cover to the endcap base using the screws used in step 6.2.

7. HDF Shelf Installation

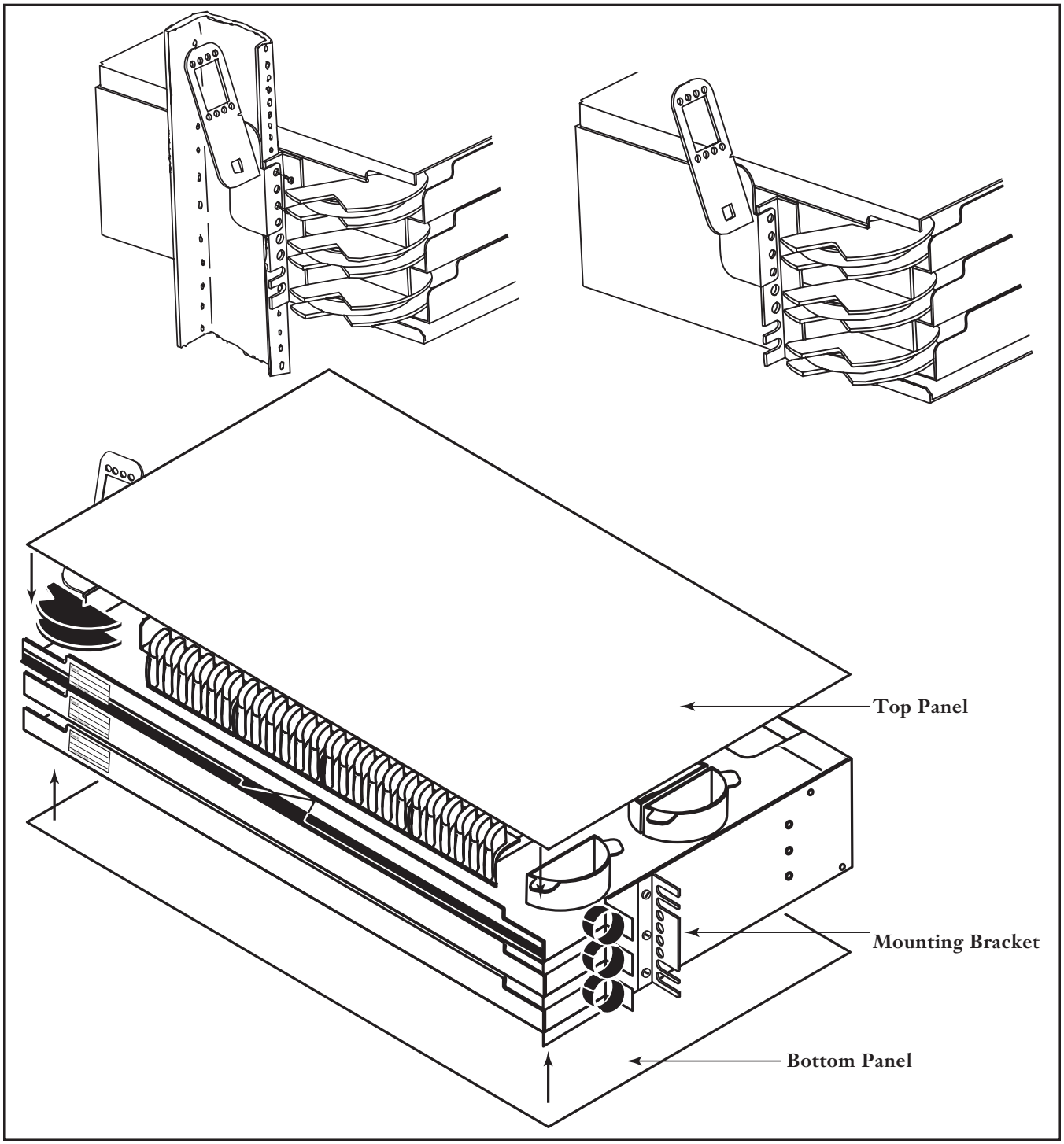

Figure 10

Three HDF drawer assemblies are mounted into each HDF housing. Housings are shipped preassembled. If your installation calls for only one housing, install it with both top and bottom panels in place. If your installation calls for more than one housing, install them so that the top housing has only the top panel in place and the bottom housing has only the bottom panel in place. Housings in between should not have either top or bottom panels. Attach shelves to the utility rack on mounting brackets using the 12-24 x 3/8-inch screws provided (Figure 10). Slide housing into position and secure with two (2) screws on the right and one (1) screw in a lower mounting slot on the left. Position the strain relief bracket on the left side so the top of the mounting bracket is flush with the top of the housing mounting bracket and secure with two (2) more screws. See detail in Figure 10.

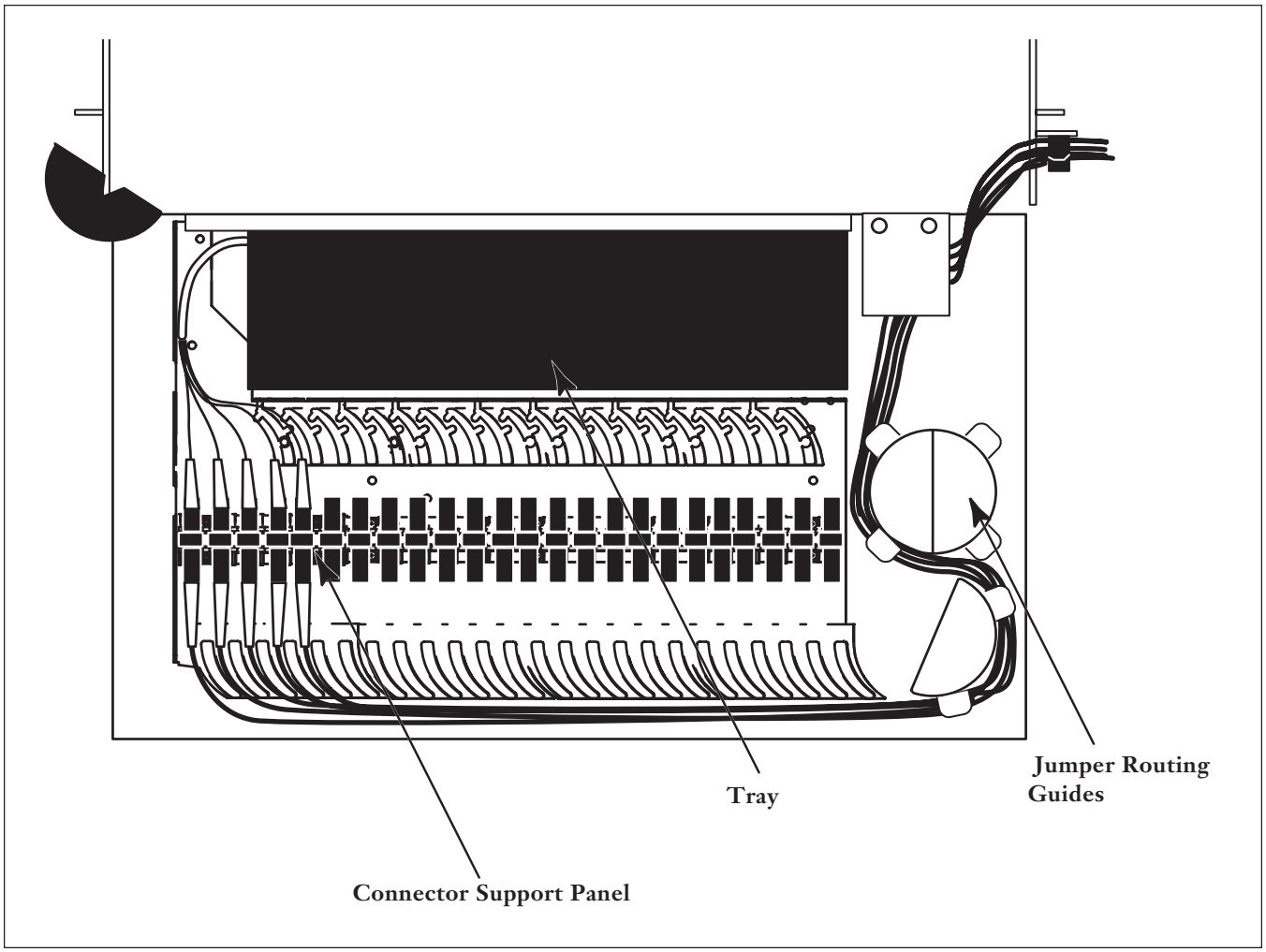

Figure 11

8. Cable Installation for Pigtail Splicing

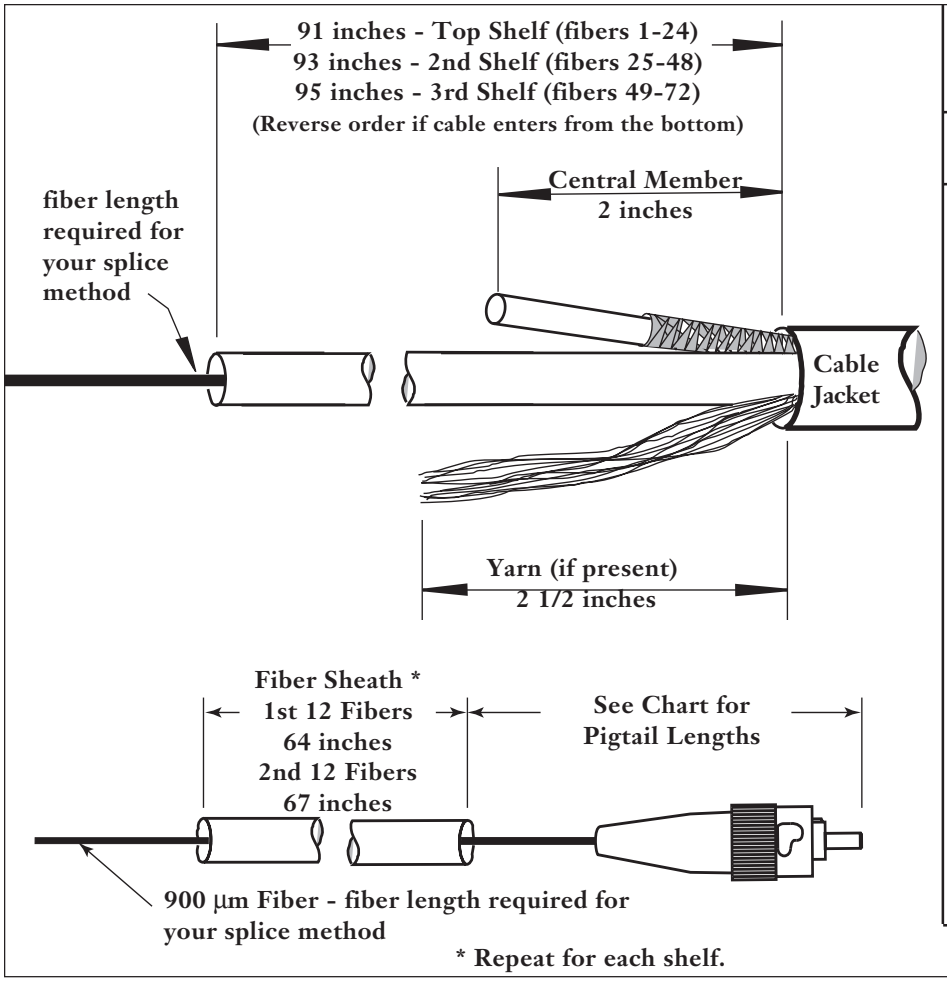

Pigtail Lengths - HDF (end of sheath to tip of connector)

Fiber #	Color	Length inches
1	Blue	4 1/4
2	Orange	4 1/4
3	Green	4 1/2
4	Brown	5
5	Slate	5 3/4
6	White	6 1/2
7	Red	7
8	Black	7 1/2
9	Yellow	8
10	Violet	8 1/2
11	Pink	9
12	Aqua	9 1/2
13	Blue	6 1/2
14	Orange	7
15	Green	8
16	Brown	8 1/2
17	Slate	9
18	White	9 1/2
19	Red	10
20	Black	10 1/2
21	Yellow	11
22	Violet	12
23	Pink	13 1/2
24	Aqua	14

Figure 12

8.1 Strip cables to the lengths illustrated in Figure 12.

8.2 Attach outside plant cables to the left side of the utility rack with cable ties.

8.3 Install a sheath retention clamp on the cable as illustrated in Figure 13.

Retention Clamp Installation

- **Take a section of clamp material and wrap it around the cable to determine the length needed for one full wrap.**
- **Use side cutters to cut the clamp material so that it ends up one section shorter than this length.**
- **Place the cut length of clamp material 1.25 cm (0.5 in.) from the end of the cable sheath. Install a hose clamp over it, covering as many of the small holes in the clamp material as possible. Hand-tighten with a slotted screwdriver or 5/16-inch nut driver.**

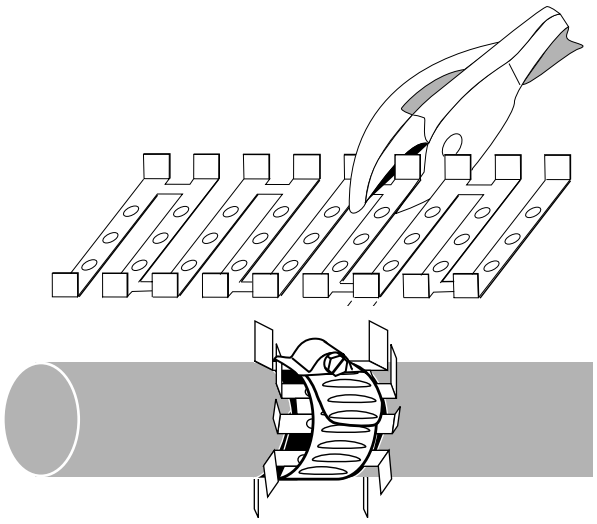

Figure 13

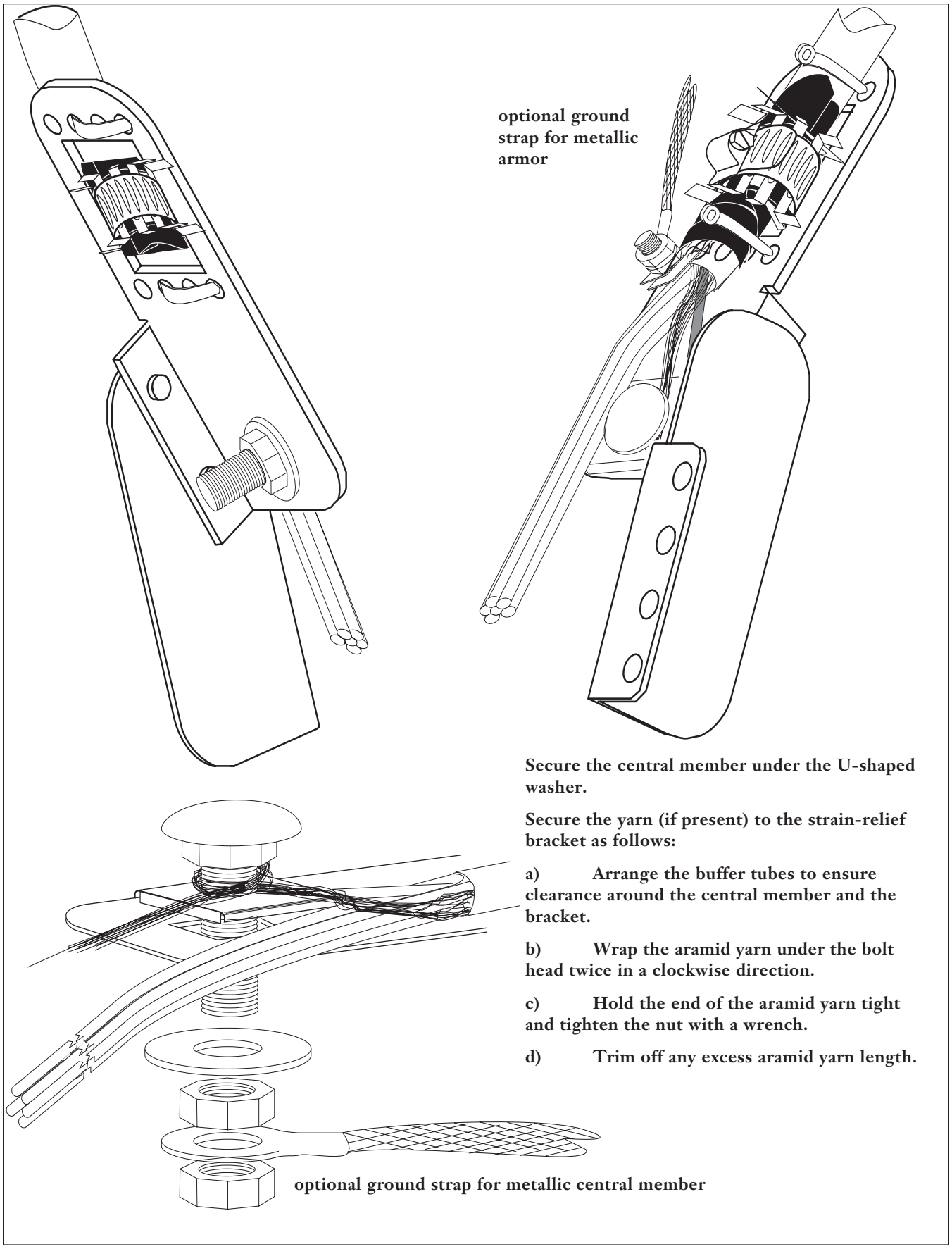
optional ground strap for metallic armor
Secure the central member under the U-shaped washer.
Secure the yarn (if present) to the strain-relief bracket as follows:
a) Arrange the buffer tubes to ensure clearance around the central member and the bracket.
b) Wrap the aramid yarn under the bolt head twice in a clockwise direction.
c) Hold the end of the aramid yarn tight and tighten the nut with a wrench.
d) Trim off any excess aramid yarn length.
optional ground strap for metallic central member

Figure 14

Central Member Clamp Shim

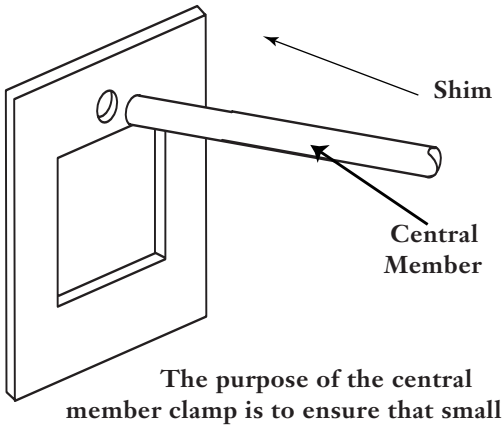

The purpose of the central member clamp is to ensure that small central members are secure adequately when used with the central member clamp.

Measure the central member (after it is stripped) by inserting it into the hole in the shim. If the central member fits, the shim is required to secured the central member. If the central member does not fit, discard the shim.

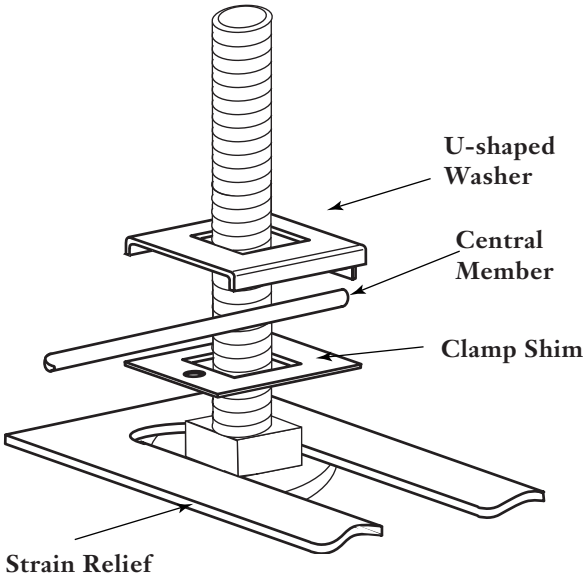

Figure 15

8.4 Strain relieve cables to strain relief brackets on the side of each shelf assembly as illustrated in Figure 12. Use a central member shim if required (Figure 15).

Grounding Clamp Installation

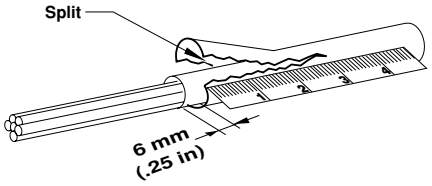

Cut a slit into opposite sides of the outer sheath and armor about 3 cm long. To do this, score the armor with a cable knife (being careful not to damage the inner sheath) and split the sheath by flexing it.

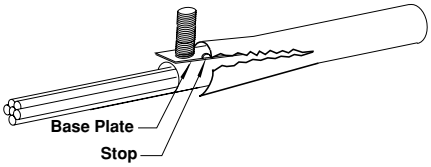

Position the base of the grounding clamp under the armor. The stops of the clamp should just touch the outside of the armor and sheath.

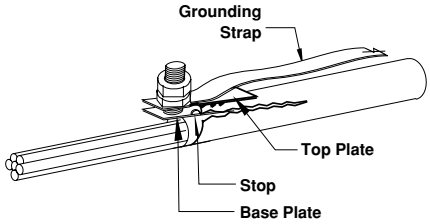

Position the top plate and a lock nut on the stud. Tighten the lock nut with a 10-mm wrench so that the teeth on the upper plate are driven into the sheath. Next, place the grounding strap on top of the lock nut and secure it with a second lock nut. Tighten the assembly with a 10-mm wrench.

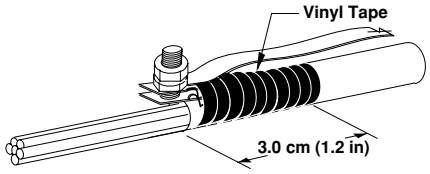

Cover the completed assembly and the slit with a few wraps of vinyl tape.

Figure 16

8.5 Fiber optic cable with metallic central member can be grounded directly to the strain-relief bracket on the side of the drawer assembly as illustrated in Figure 14. Ground metallic cable sheath using a ground clamp (Figure 16). This clamp is generally installed below the sheath retention clamp on the strain-relief bracket. Be sure to ground the clamp to the HDF ground wire and the HDF ground wire to an earth ground with a No. 6 AWG copper conductor.

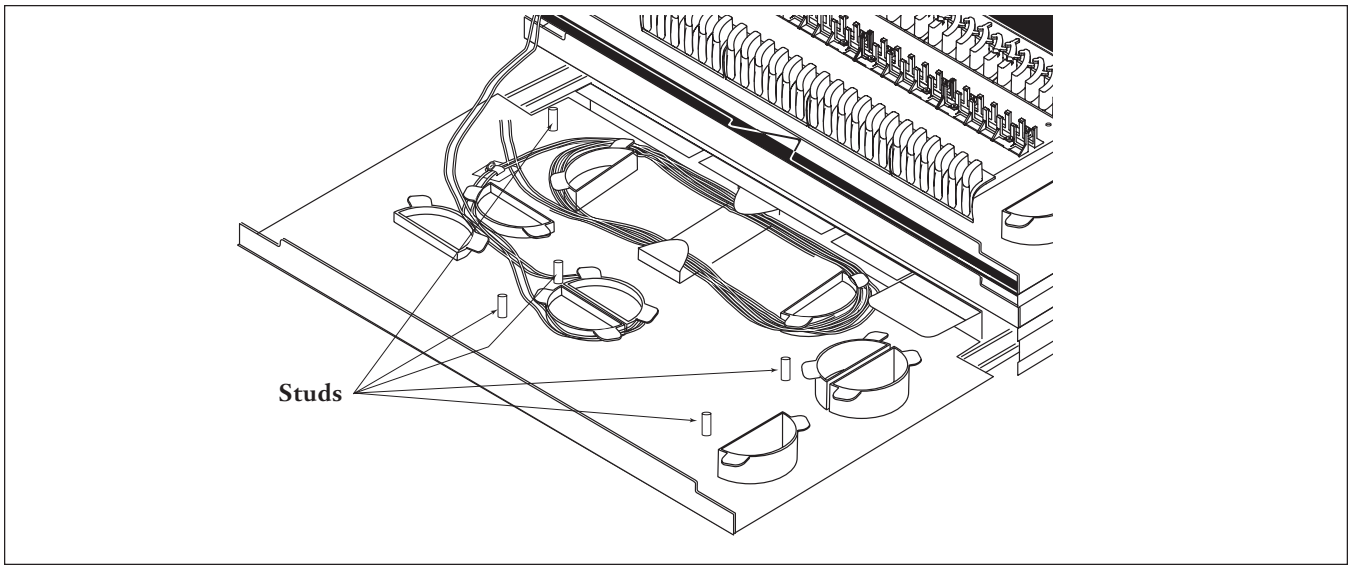

Figure 17

8.6 The connector shelf is held in place on five studs (Figure 17). Pry up the connector shelf to access the fiber guides. Once buffer tubes have been routed, replace the shelf.

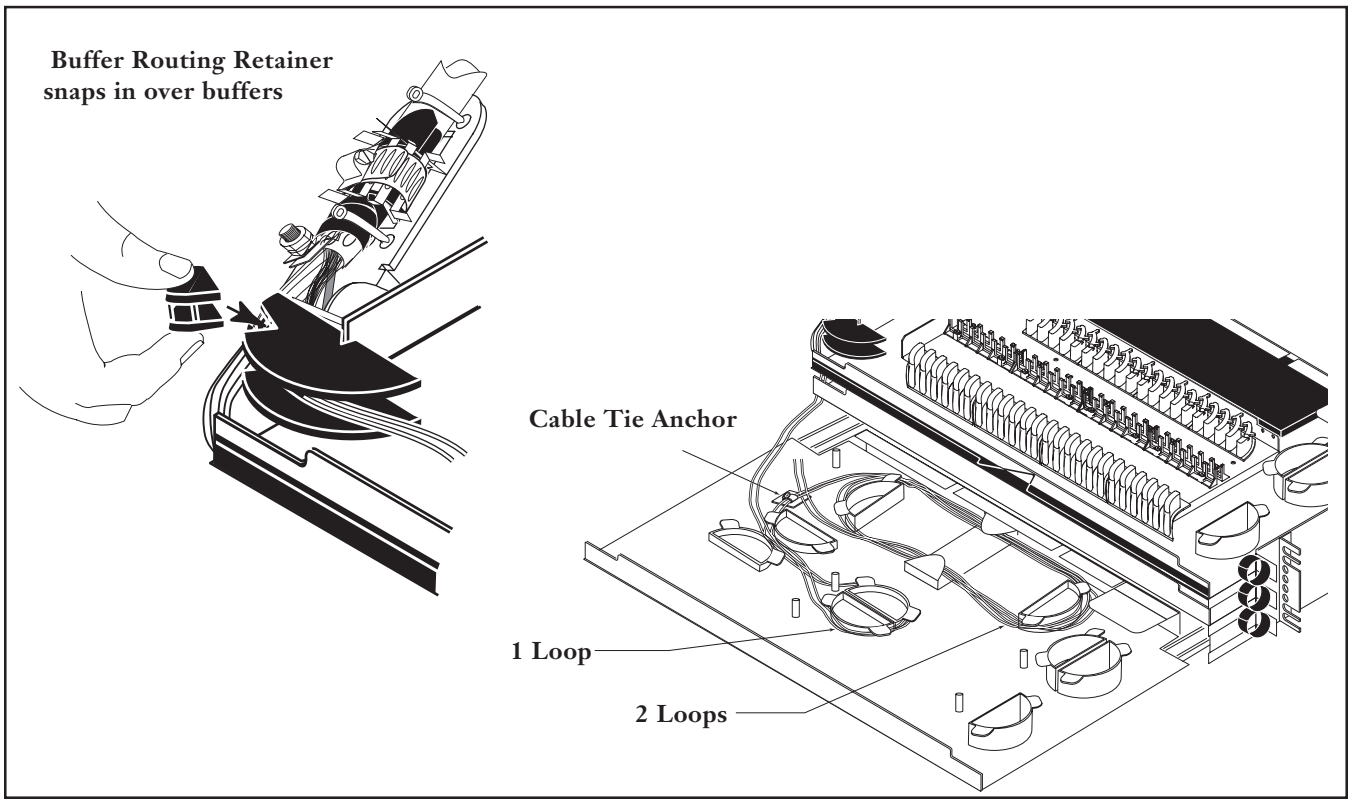

Figure 18

8.7 Cable is routed into the HDF drawer and wound around fiber guides as illustrated in Figure 18. It is important that the drawer be pulled fully forward before routing the buffer tubes. After the buffer tubes are routed around the spools, secure them with the provided 4-inch cable tie to the cable tie anchor. It may be necessary to wrap 1 inch of vinyl tape around buffer tubes at tie wrap point to ensure a good grip.

9. Connector Sleeves

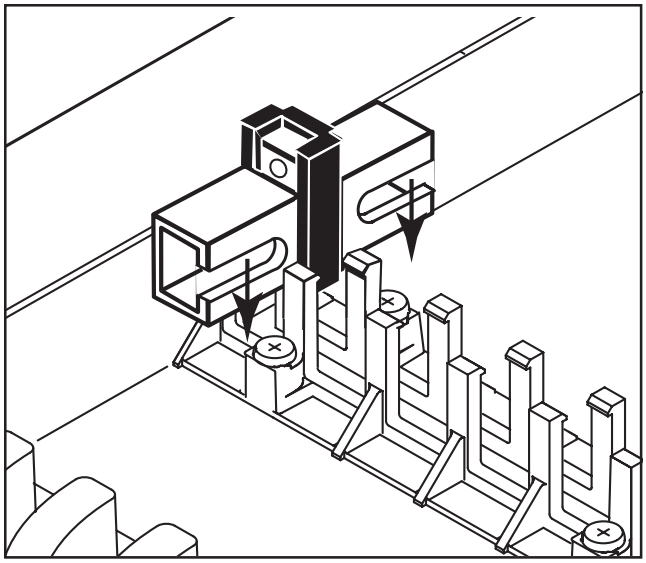

Figure 19

9.1 Connector sleeves are installed in slides on the connector support panel. Raise the connector to access it for connector installation (Figure 19).

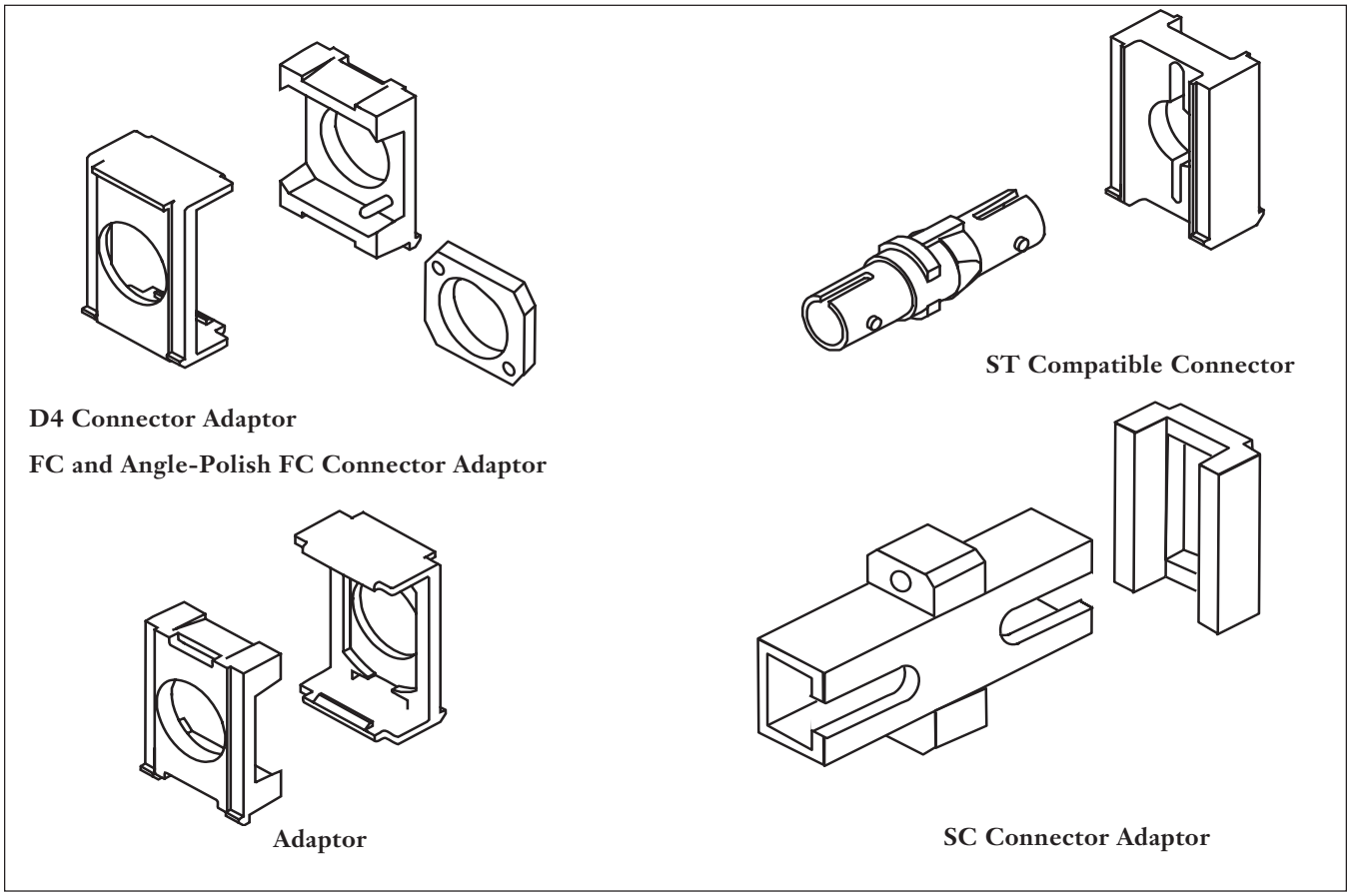

Figure 20

9.2 Connector sleeve adapters are available to fit the SC, D4, ST, FC, and angled polish connector sleeves. See Figure 20 for installation of each sleeve type.

10. Pigtail Installation

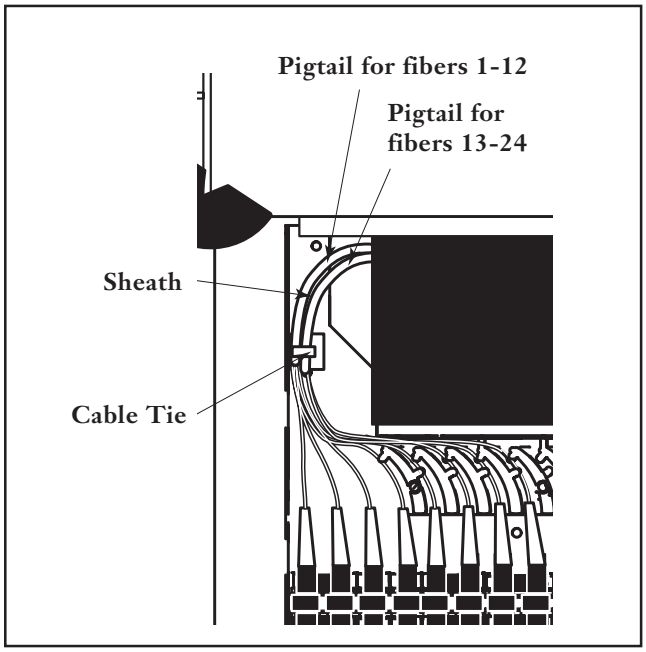

Figure 21

10.1 Pigtails are fiber optic cables with connectors only at one end. The connectors are installed into sleeves in the connector shelf and pigtails are routed through the fiber guides behind the sleeves (Figure 21).

10.2 The unterminated ends of pigtails are spliced to buffered fibers in the splice tray located behind the removable shelf.

11. Splicing

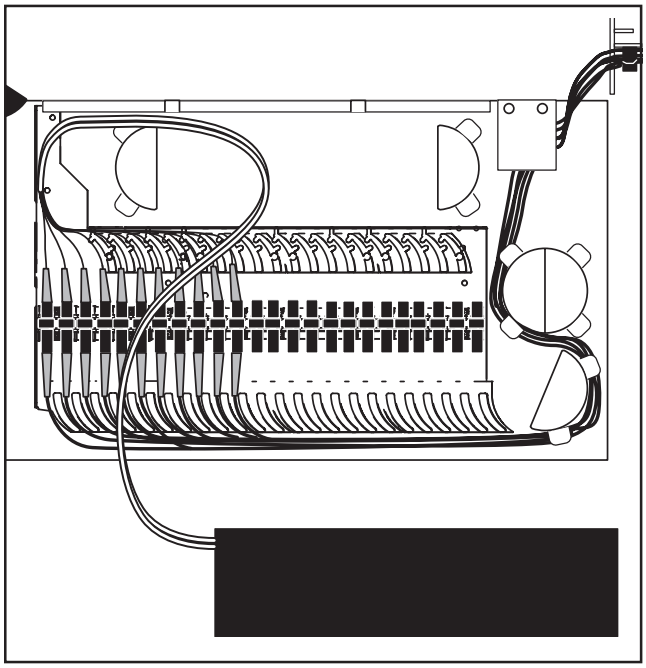

Figure 22

11.1 Bring both pigtails and buffered fibers to a convenient splicing area - one pair at a time. Strain-relieve buffer tubes and pigtails into the splice tray as described in instructions packaged with the splice tray you are using.

11.2 Splice the fibers as described in instructions for the splicing method you are using. As you complete a splice, record the location on a record label.

11.3 Coil fiber slack into the splice tray and snap the tray cover into place.

11.4 Once splicing is complete, coil slack onto the plastic guides and slide the completed tray into the tray holder.

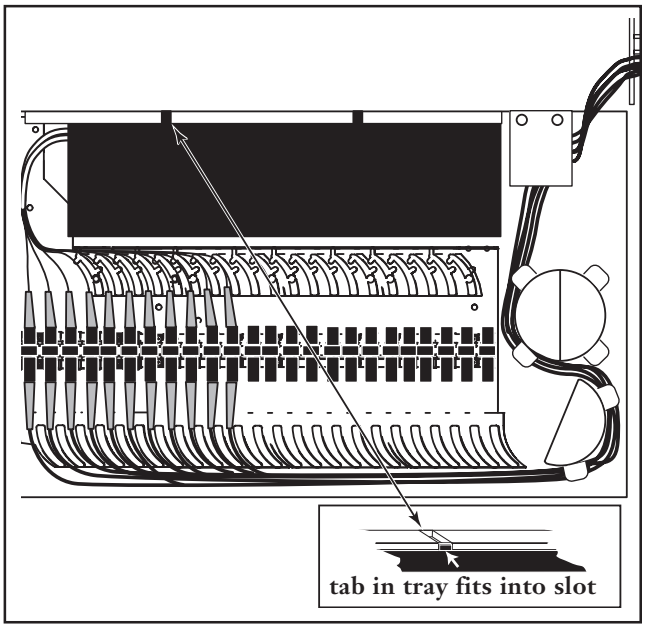

Figure 23

12. Jumper Installation

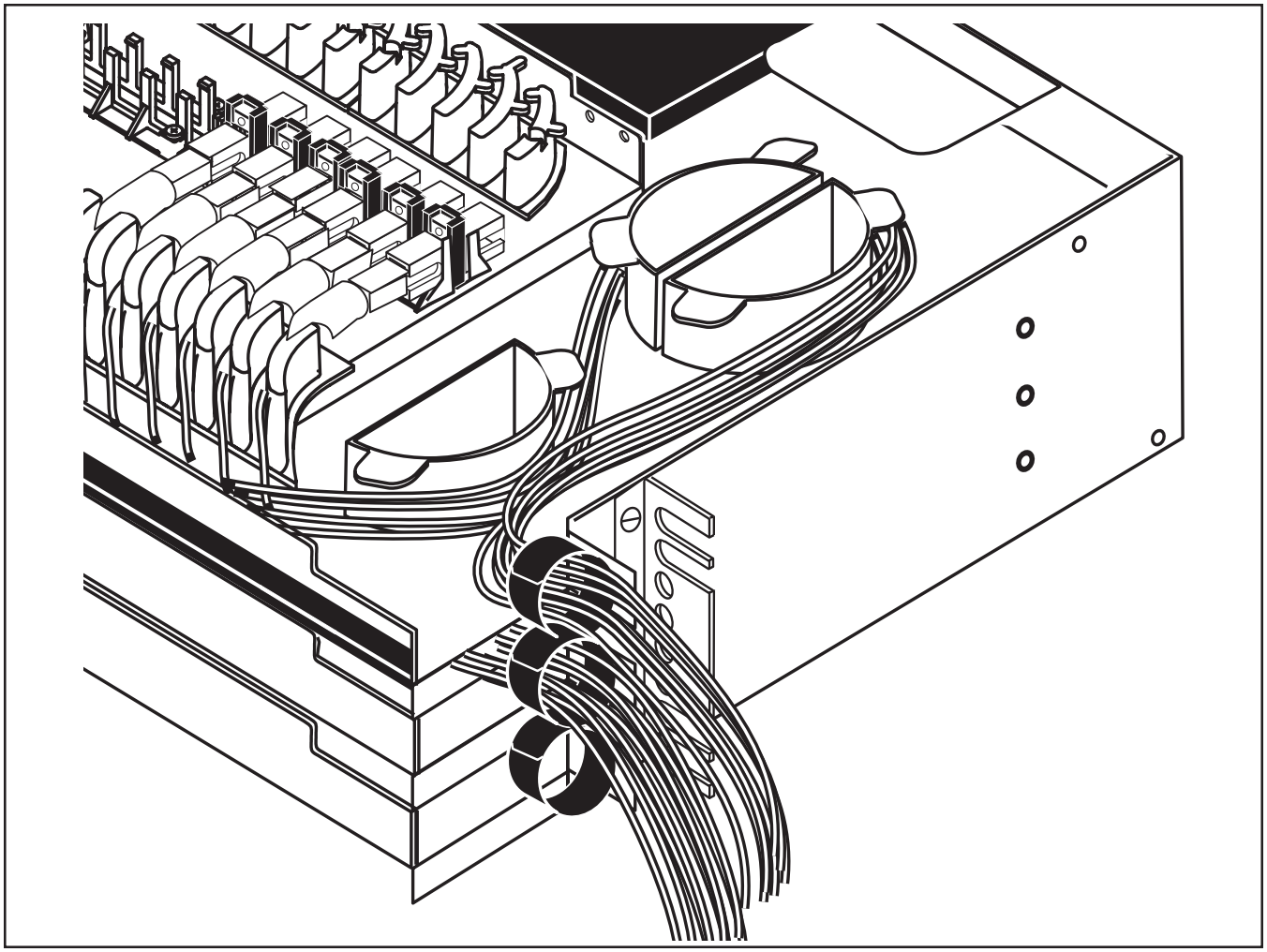

Figure 24

12.1 Jumpers are fiber optic cable with connectors at both ends. One end is installed in the connector sleeve in the HDF drawer and the other end is generally connected to electronic equipment.

12.2 Route jumpers around routing guides on the drawer assembly as shown in Figure 24.

12.3 Close drawer assembly and use the hook-and-loop strap on the side of the housing to secure the incoming bundle of jumpers.

13. Attenuators

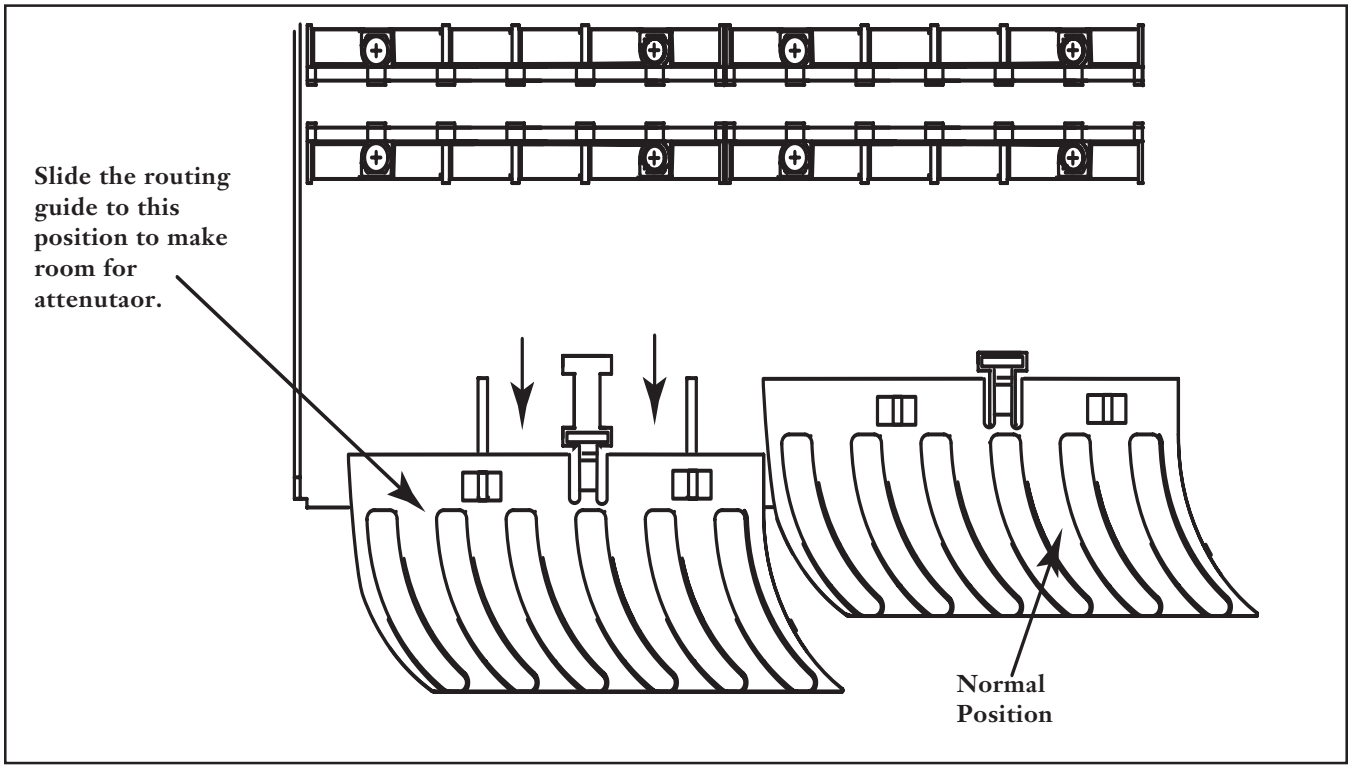

Figure 25

Attenuators, if used, are attached between the jumper and the connector sleeve. To make room for attenuators, slide the routing guides in front of the connector sleeves out to the second position (Figure 25).

14. Documentation

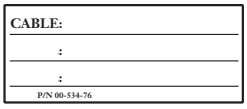

Front Shelf Label

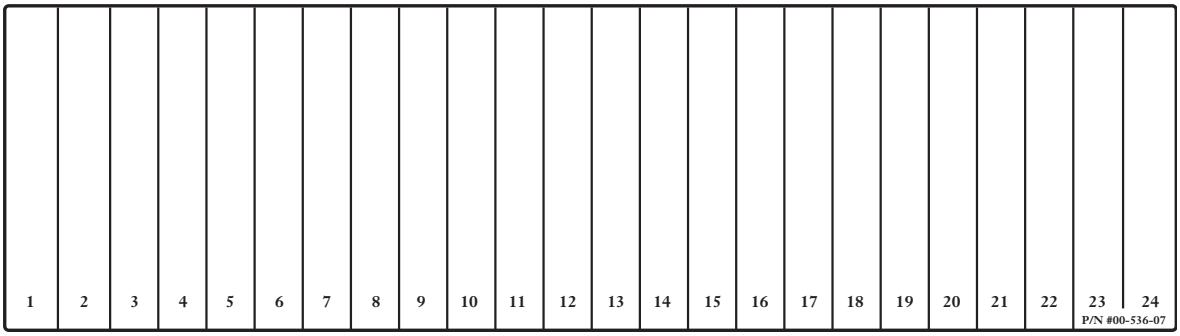

Inside Cover Label

Figure 26

14.1 Keep track of splicing and connector information on the record label on the inside cover (Figure 26).

14.2 Incoming cable information may be recorded on the label on the front of the housing.

15. Maintenance

The HDF requires very little maintenance (beyond making a regular inspection) to make sure fibers and HDF parts remain in good condition, and occasional cleaning with a damp, non-abrasive cloth. Some of the things to look for on inspections include:

- **LOOSE PARTS:** Check nuts, bolts, and screws for looseness and tighten.
- **MOISTURE:** Check the HDF for accumulated moisture and place moisture absorbent packets in problem areas.
- **FIBERS:** Check fiber optic cable to make sure bends do not violate the minimum bend radius. Check cable for unnecessary strain. Check cable entries and exits for crimping or crushing.
- **LABELS:** Check unit labels to make sure all are clear and accurate.

16. Connector Care

16.1 At installation, use a clean tissue soaked in alcohol to gently clean connectors at the end of the jumper or pigtail. Clean all the areas of the connector that will contact the connector sleeve.

16.2 Do not press on connectors as you clean. Doing so may scratch or crack the connector surface, making it unusable.

16.3 Carefully press the connector into its receptacle and tighten.

16.4 Do not over-tighten. Doing so can damage the connector surfaces, making them unusable.

16.5 Do not allow the connector body (ferrule) to turn as you screw it into place. Doing so will allow surfaces to grind against each other. The resulting scratches could render the connector unusable.

16.6 The connector should fit into its receptacle easily. If it binds, back it up. Do not force.

16.7 Clean external components of installed connectors at regular intervals as recommended by their manufacturer.

Corning Cable Systems welcomes your comments concerning this Standard Recommended Procedure. You may send your comments to the following address:

Technical Publications Department
Corning Cable Systems
9275 Denton Highway
Keller, TX 76248 USA

You may also submit comments via email to:

KPTechPubs@Corning.com

Corning Cable Systems LLC
PO Box 489
Hickory, NC 28603-0489 USA
FAX: 828-325-5060
International: 828-901-5000
http://www.corning.com/cablesystems