CORNING

Reversed Connector Housing (RCH-05U)

P/N 003-662
Issue 4

related literature | Search www.corning.com/opcomm. Click on “Resources.”	
0172_NAFTA_AEN	Closet Connector Housing Panels (CCH-CP)
0174_NAFA_AEN	Closet Connector Housing Pigtail Modules and Panels
0240_NAFTA_AEN	Buffer Tube Fan-Out Kits

1. General

This document describes the installation of RCH-05U Reverse Connector Housing (Figure 1).

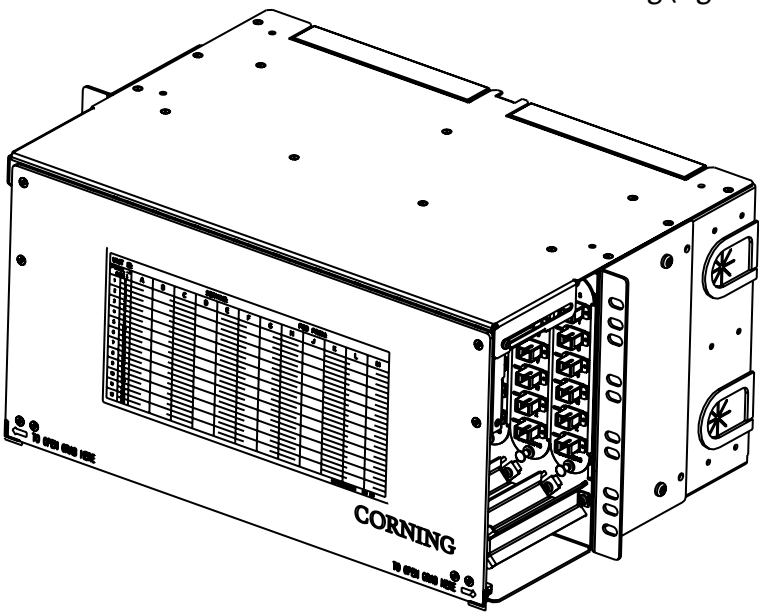

Figure 1

2. Components

The main components of the RCH-05U Reverse Connector housing are illustrated in Figure 2. Hardware kit contents include:

- Cable ties (12)
- Strain-relief bracket (1)
- #6-32 wing nuts (2)
- Extension brackets for mounting to 23-inch rack (2)
- #10-32 rack-mount screws (8)
- #12-24 rack-mount screws (4)
- Spiral wrap
- M6 mounting screws (4)
- M6 cage nuts (4)
- Universal Cable Clamp kits (2)
- Cable strength member strain-relief kits (2)

To install the unit into a 23-inch utility rack, attach the bracket adapters to the mounting brackets using the hardware provided.

Adapter brackets for a 24-inch rack are purchased separately.

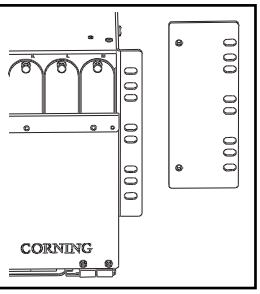

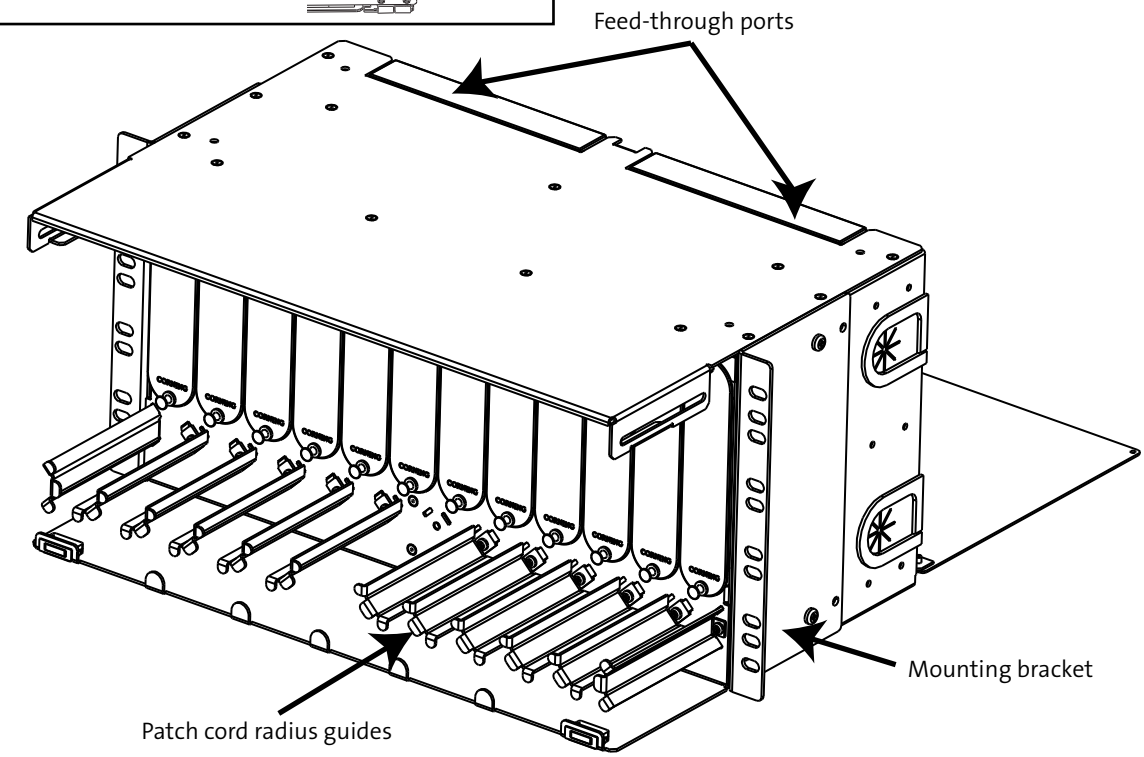

Patch cord routing is reversible; all cords may exit either from the right or the left sides, or be split to exit on both sides.

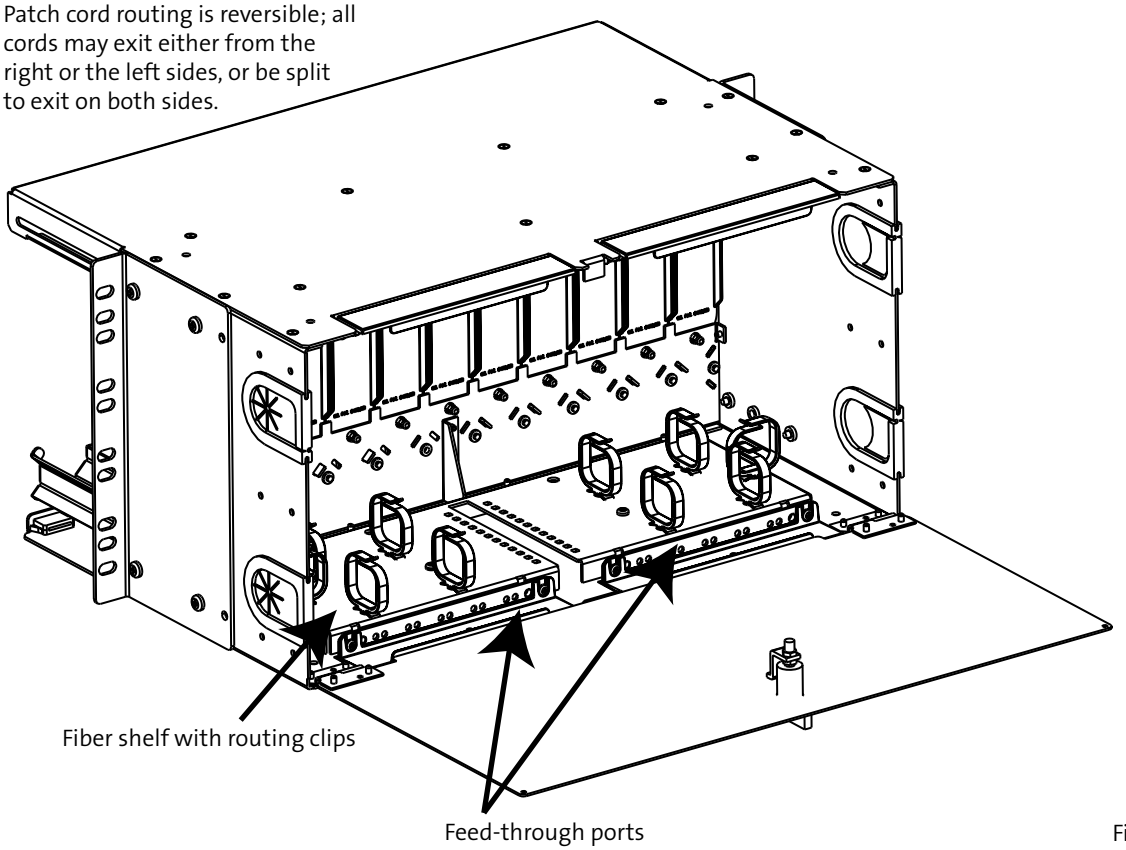

Figure 2

3. Product Installation

3.1 Mounting the Housing into a Rack

Attach the unit to the equipment rack using the four screws provided. Two screws are required per side of each housing.

3.2 Securing the Cable

Step 1: Open front door completely and slide beneath top of housing.

Step 2: To ease cable installation, remove rear door by sliding it to the left and slightly bowing the door to release the hinges. Reverse step to replace the door. Do not over bend the door. Doing so will cause the door to become permanently warped.

Step 3: Determine location for cable entry into housing.

Step 4: Secure the cable to the outside of the housing using one of the two methods below - using the UCC or using cable ties.

NOTE: *Fiber optic cable is sensitive to excessive pulling, bending and crushing forces. Consult the cable specification sheet for the cable you are installing. Do not bend the cable more sharply than the minimum recommended bend radius. Do not apply more pulling force to the cable than specified. Do not crush the cable or allow it to kink. Doing so may cause damage that can alter the transmission characteristics of the cable — the cable may have to be replaced.*

3.2.1 Using the UCC:

Step 1: Cut the strength member and yarn, if present, flush with the cable sheath.

Step 2: Attach the UCC clamshell to the strain-relief bracket as shown in Figure 3.

Step 3: Follow installation instructions provided with the UCC kit to secure the cable. Allow room on the bracket to strain-relieve the strength member, if necessary. Do not tighten yet to allow for cable adjustment if necessary.

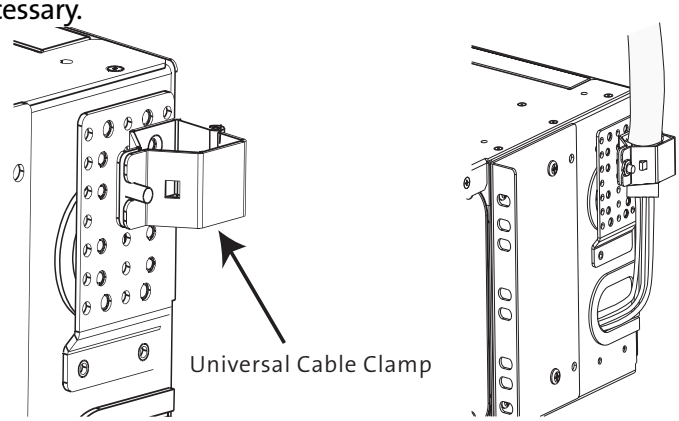

Figure 3

3.2.2 Using cable ties:

!	**CAUTION:** Recommend the use of safety glasses (spectacles) conforming to ANSI Z87, for eye protection from accidental injury when handling chemicals, cables or fiber. Pieces of glass fiber are very sharp and have the potential to damage the eye.

!	**CAUTION:** The wearing of cut-resistant safety gloves to protect your hands from accidental injury when using sharp-bladed tools and armored cable is strongly recommended. Use extreme care when working with severed armor. There will be a sharp edge where armor is cut. To minimize the chance of injury from the cut armor, cover the exposed edge with a wrap of electrical tape. To minimize the chance of injury from sharp-bladed tools, always cut away from yourself and others. Dispose of used blades and armor scrap properly.

Step 1: Attach the cable to the strain-relief bracket with cable ties in two places as shown in Figure 4.

Step 2: Allow room on the bracket to strain-relieve the cable strength member, if necessary.

NOTE: *If at least 10 m (33 ft) of OSP cable is routed within an environmentally controlled building where temperature fluctuation is minimal, securing the cable sheath is adequate strain-relief. It is not necessary to strain-relieve the strength member, as well.*

Step 3: Cut strength member and yarn to 4 inches.

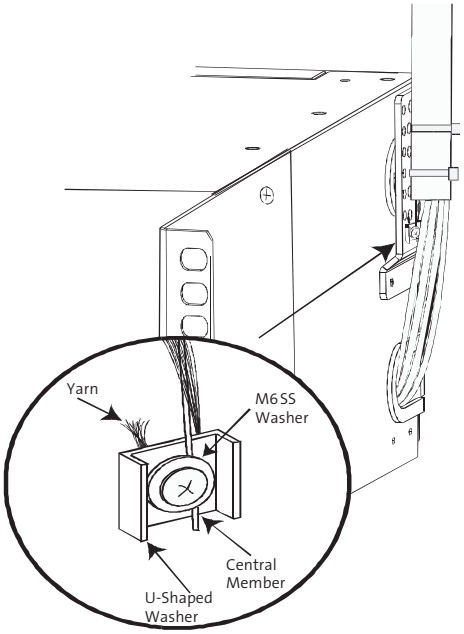

Figure 4

3.3 Strain-relieving the Strength Member

Step 1: Install the U-shaped washer and the flat washer on the strain-relief bracket using the supplied Phillips-head machine screw (Figure 4).

Step 2: Place the yarn, if present, and central member between the U-shaped washer and the flat washer.

Step 3: Wrap yarn around the screw and under the U-shaped washer in a clockwise direction.

Step 4: Tighten the nut.

Step 5: Trim off the excess yarn and strength member.

Step 6: Tear out the membrane from the appropriate cable entry grommet and feed the cable through it into the housing.

Optional Strain-relief Method

When your application does not allow the installation of the strain-relief bracket for outside strain-relief, the cable may also be strain-relieved inside the unit as shown in Figure 5.

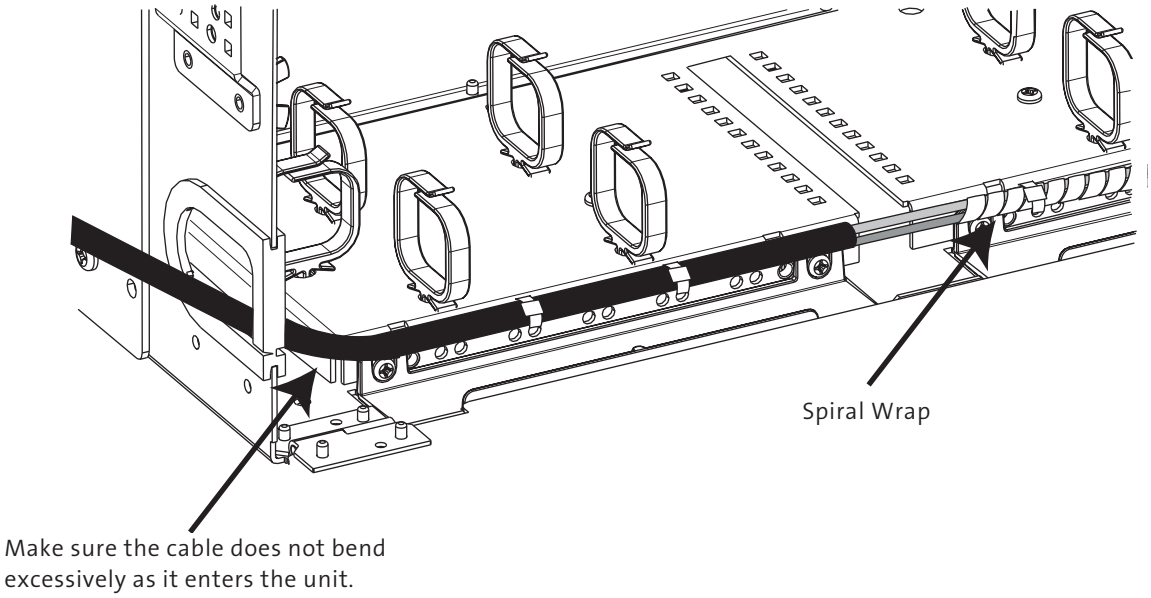

Figure 5

When strain-relieving tight buffered cable, never leave 900 micron-fiber exposed outside the housing. Either route the jacketed cable into the housing or protect the exposed 900 micron-fibers with spiral wrap, making sure the spiral wrap extends up over the jacket.

3.4 Grounding Armored Cable

Step 1: One grounding kit (p/n FDC-CABLE-GRND, purchased separately) is required to ground each armored cable. Follow instructions provided with the grounding kit.

Step 2: Attach the other end of the ground wire to the equipment rack. The equipment rack must be grounded to the primary building ground.

Step 3: Remove the paint from the frame at the grounding location to ensure metal-to-metal contact. It is recommended to use an antioxidant on the bare metal to prevent corrosion.

Or, attach the other end of the ground wire to a rack-mounted grounding bus bar, which is grounded to the primary building ground.

3.5 Installing Preconnectorized Cable into Connector Panels

WARNING: Never look directly into the end of a fiber that may be carrying laser light. Laser light can be invisible and can damage your eyes. Viewing it directly does not cause pain. The iris of the eye will not close involuntarily as when viewing a bright light. Consequently, serious damage to the retina of the eye is possible. Should accidental eye exposure to laser light be suspected, arrange for an eye examination immediately.

WARNING: DO NOT use magnifiers in the presence of laser radiation. Diffused laser light can cause eye damage if focused with optical instruments. Should accidental eye exposure to laser light be suspected, arrange for an eye examination immediately.

Step 1: Remove the blank panels from the unit and replace with appropriate connector panels (purchased separately).

Step 2: Route slack through the routing clips on the fiber shelf.

Step 3: Install connectors into the adapters at the rear of the connector panels (Figure 6).

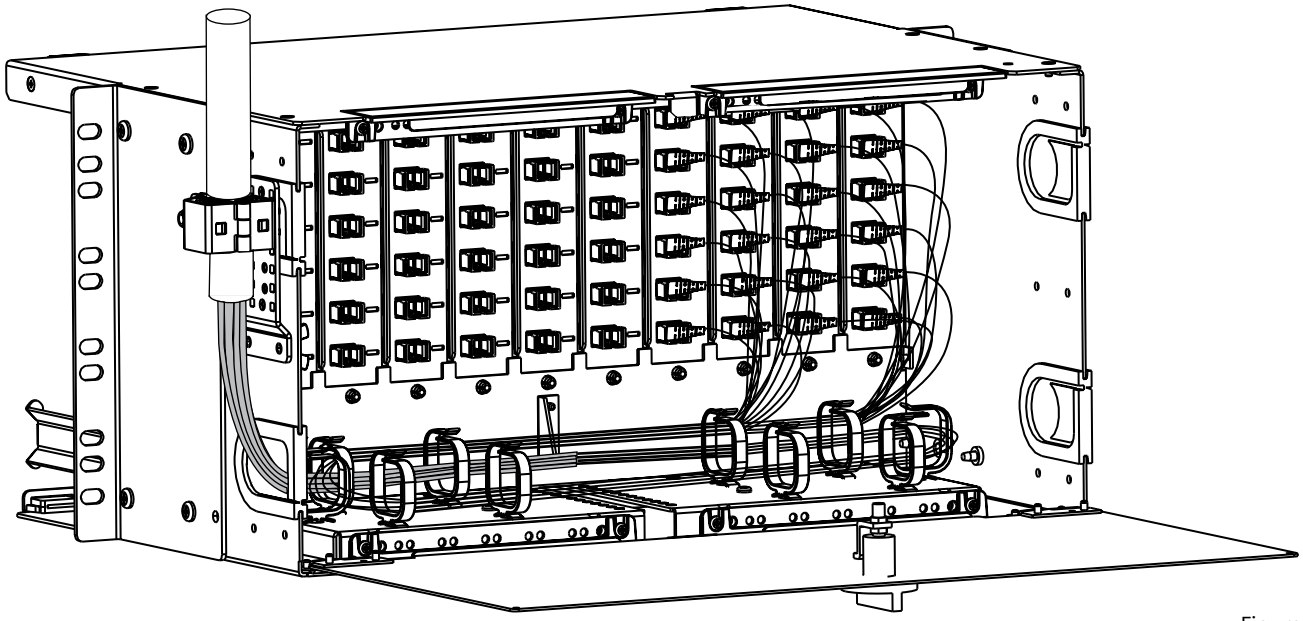

Figure 6

3.6 Installing Plug & Play™ System Modules

Figure 7 is representative of a typical Plug & Play module installation.

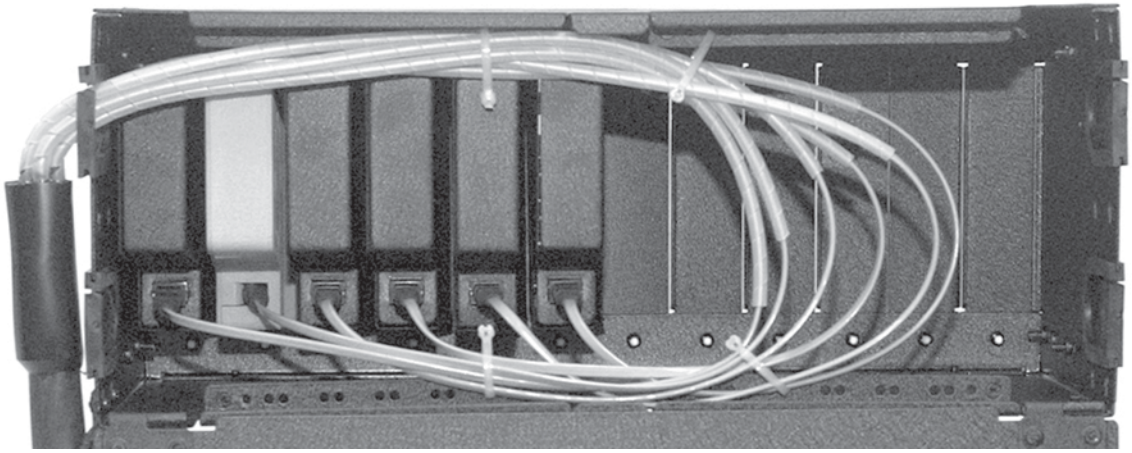

Figure 7

3.7 Installing a Buffer Tube Fan-out Kit

Loose-tube fiber optic cable can be connectorized using buffer tube fan-out (BTF) kits (purchased separately). Terminate the fibers according to the instruction provided with the BTF kit.

Step 1: Slide the fan-out body into the shelf with the rings underneath the shelf.

Step 2: Secure the BTF body to the splice shelf using a cable tie (Figure 8).

Step 3: Route buffer tubes through the routing clips on the splice shelf and terminate connectors in the connector adapters.

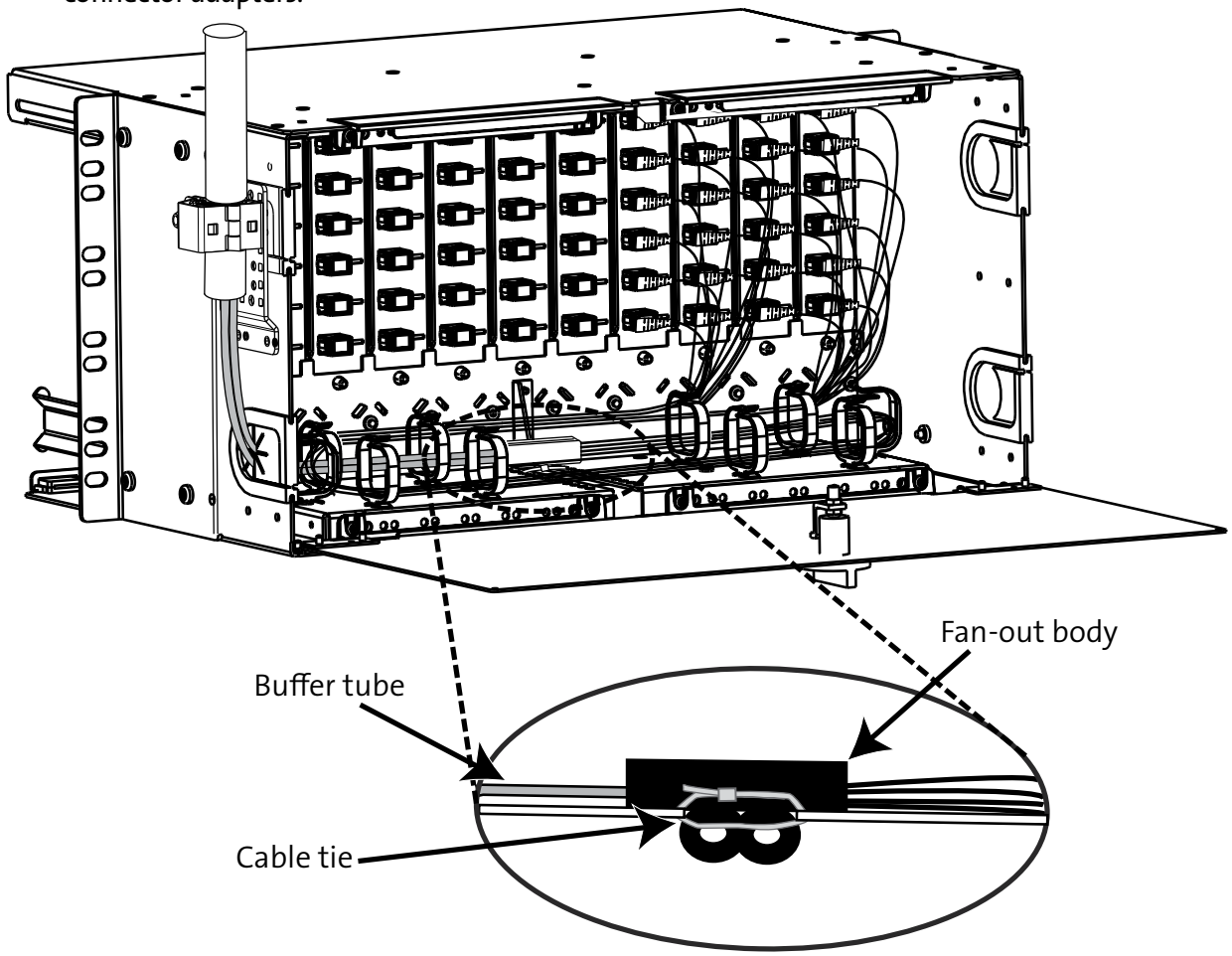

Figure 8

3.8 Splicing

Splicing applications require a Connector Splice housing (purchased separately). Follow the instructions provided with the splice housing for detailed instructions.

Step 1: From the front of the RCH unit, feed the pigtail cable through the opening to the rear of the housing. Then install connector panel or module into unit.

Step 2: Remove the appropriate feed-through ports dictated by the location of the splice housing. Route pigtail fibers through feed-through ports in the top or bottom of the housing to the splice housing.

Step 3: Store slack cable in the splice housing or in the RCH unit as shown in Figure 8.

3.9 Routing Patch Cords

Step 1: Install patch cords as specified on planning diagrams. Route patch cords through routing guides at the front of the housing (Figure 9).

Step 2: Attach identification (ID) label to front door as shown in Figure 1. Record information appropriately on the ID label.

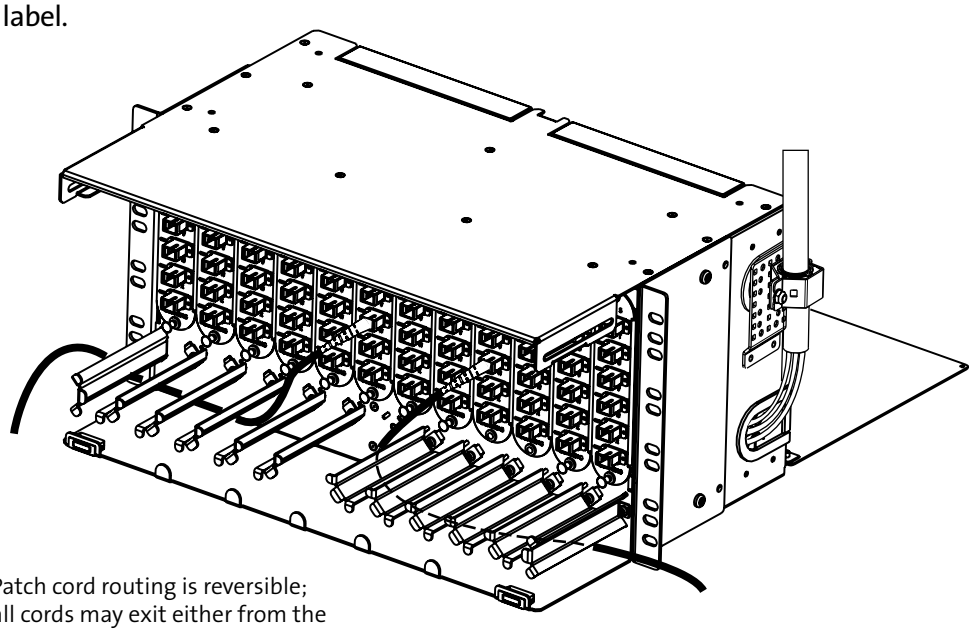

Patch cord routing is reversible; all cords may exit either from the right or the left sides, or be split to exit on both sides.

Figure 9

4. Maintenance

The unit requires very little maintenance to ensure fibers and parts remain in good condition.

- External components may be cleaned occasionally with a damp, nonabrasive cloth.
- Check nuts, bolts, and screws; tighten as needed.
- Check fiber optic cable to make sure bends do not exceed the minimum bend radius.
- Check cables for unnecessary strain, for crimping or crushing at entries and exits, and for damage.
- Check unit record labels to make sure all are clear and accurate.

Corning Optical Communications LLC • PO Box 489 • Hickory, NC 28603-0489 USA
800-743-2675 • FAX: 828-325-5060 • International: +1-828-901-5000 • www.corning.com/opcomm