Installing Intrafacility Ribbon Cable into an SBA Drop-down Panel Housing

Revision History

Issue	Date	Reason for Change
1	12/2006	Initial release

Related Literature

003-391	Instruction, Universal Cable Clamp
003-731	Instruction, Mounting an SBA Drop-down Panel Housing, Stubbed or Unstubbed

Table of Contents

1. Product Description 2
2. Carton Contents 2
3. Tools and Materials Required 2
   3.1 Tools 2
   3.2 Materials 2
4. Precautions 2
5. Mounting Housing 3
6. Installing Intrafacility Ribbon Cable 3
   6.1 Secure Cable 3
   6.2 Route Distribution Ribbon Fibers into the Housing 4
   6.3 Mount Fan-out Body with Connectorized Pigtails 5
   6.4 Install Inline Attenuators (Optional) 6
   6.5 Route Distribution Jumpers into the Housing 6
7. Completing Installation 7
8. Testing 7
   8.1 Provisioning Tests 7
   8.2 Troubleshooting Tests 8
9. Growth 8
10. Maintenance 8

Admonishments

The precautionary terms used by Corning Cable Systems in its standard recommended procedures conform to the guidelines expressed in the American National Standards Institute

document (ANSI Z535) for hazard alert messages. Alerts are included in this instruction based on the following:

DANGER: *indicates an imminently hazardous situation which, if not avoided, will result in death or serious injury.*

WARNING: *indicates a potentially hazardous situation which, if not avoided, could result in death or serious injury.*

CAUTION: *indicates a hazardous situation which, if not avoided, may result in minor or moderate injury.*

1. PRODUCT DESCRIPTION

The SBA drop-down panel housing is a 1U-high housing that can be mounted into either a 19- or 23-inch rack. The unit has a slideable drawer that will accommodate up to 24 connectors and mass fusion or single-fiber splices.

The drawer is designed to provide multi-position access when rack-mounted. The unit consists of two layers that can be separated depending upon the service task being performed. The top layer pivots up while the bottom remains stationary to provide access to the splice tray. Both top and bottom layers pivot down, if desired, to allow for easy access to the adapters. The drawer provides service loop storage that prevents kinking and allows easy removal of the splice tray to a nearby work area. Fiber management and bend radius controls are provided throughout the product to ensure signal integrity.

The Corning Cable Systems housing is designed for controlled environmental vault, hut, and central office applications. The typical application provides an interconnect between outside plant fibers and electronic equipment. This unit allows for easy termination, rearrangement, and test access in one convenient location.

2. CARTON CONTENTS

- Intrafacility (IFC) Ribbon Cable in the length specified by the customer

3. TOOLS AND MATERIALS REQUIRED

3.1 Tools

The following tools or an equivalent may be required for this installation:

- Phillips-head and slotted screwdrivers
- 7/16- and 3/8-inch wrench or nut driver
- Vinyl tape

3.2 Materials

- Cable ties
- Connector cleaning supplies as specified by company practices

4. PRECAUTIONS

This section provides precautions to be observed when installing this product.

Cable Handling Precautions

NOTE: *Fiber optic cable is sensitive to excessive pulling, bending, and crushing forces. Consult the cable specification sheet for the cable you are installing.* ***Do not bend the cable more sharply than the minimum recommended bend radius. Do not apply more pulling force to the cable than specified. Do not crush the cable or allow it to kink.*** *Doing so may cause damage than can alter the transmission characteristics of the cable; the cable may have to be replaced.*

Laser Handling Precautions

WARNING: ***Never look directly into the end of a fiber that may be carrying laser light.*** *Laser light is invisible and can damage your eyes. Viewing it directly does not cause pain. The iris of the eye will not close involuntarily as when viewing a bright light. Consequently, serious damage to the retina of the eye is possible. Should accidental eye exposure to laser light be suspected, arrange for an eye examination immediately.*

5. MOUNTING HOUSING

Mount the housing per the instructions provided with the housing.

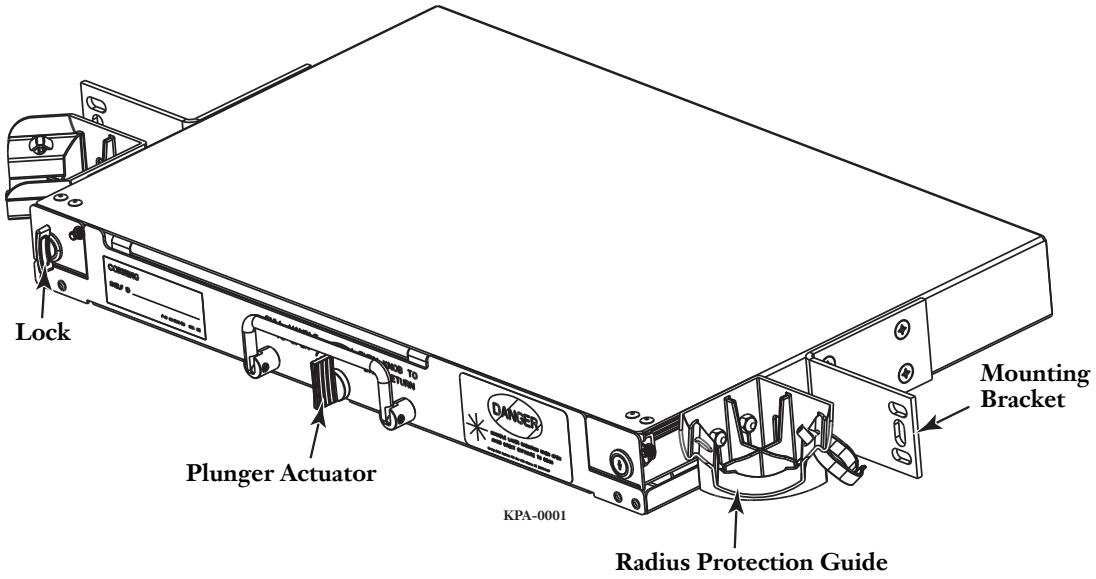

Figure 1 — Attach Brackets to Housing

6. INSTALLING INTRAFACILITY RIBBON CABLE

6.1 Secure Cable

Step 1: Install the mounting bracket plate from a Universal Cable Clamp (UCC) kit (purchased separately) in a suitable location to allow the cable to route into the housing.

Step 2: Attach the UCC to the mounting bracket per the instructions provided with the UCC (Figure 2).

Step 3: Using the appropriate number of shims as explained in the instructions provided with the UCC, secure the cable jacket just above the heatshrink tubing inside the UCC.

Step 4: Close and secure the UCC clamshell around the cable jacket.

Step 5: Place raceway in approximate required location to prevent damage to unsheathed fibers as they transition from the UCC to the point where they enter the housing.

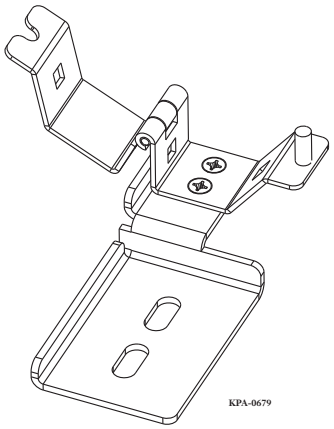

Figure 2 — Attach UCC to Mounting Bracket

Step 6: If required, obtain a raceway (purchased separately) and cut to length. Attach the raceway to the rack per the instructions provided with it.

Step 7: Place the cable inside the raceway and snap the cover back on the raceway.

6.2 Route Distribution Ribbon Fibers into the Housing

Step 1: If the drawer is locked, unlock it; then slide the drawer out of the housing.

Step 2: Lift up on the platform inside the drawer (Figure 3). Slide the platform support arm out of its stored location on the right side of the platform and swing it down. Fit the loose end into the slot in the right side of the shelf to hold the platform in an upright position.

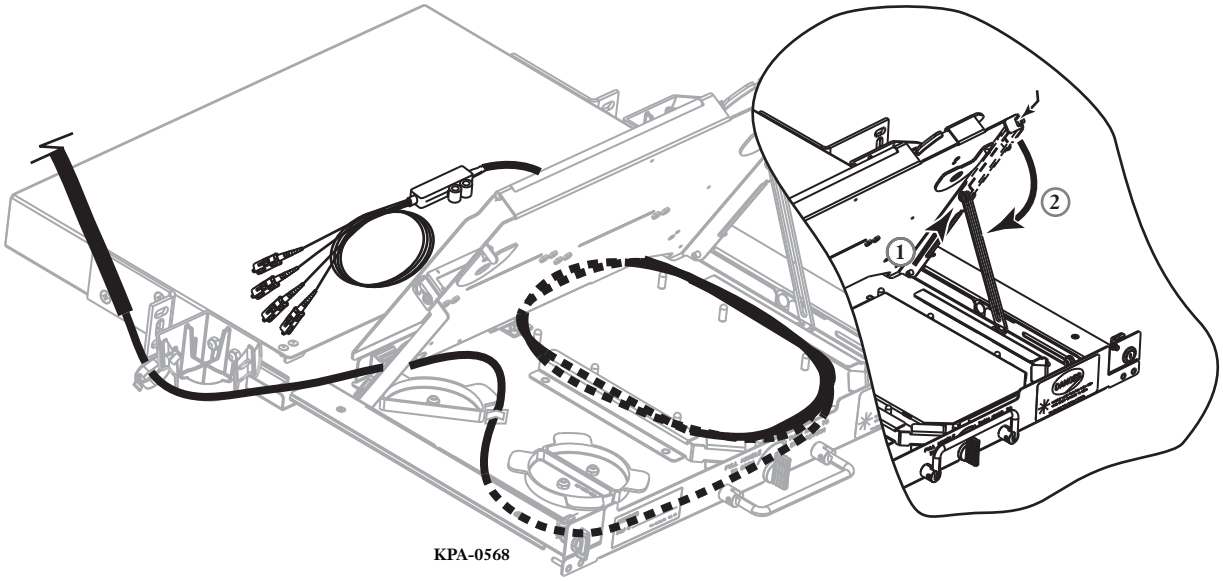

Figure 3 — Route IFC into Housing

Step 3: Feed the connectorized fan-out body through the slot in the side of the platform cover and route the braided tubing containing the distribution ribbon in the lower layer as shown in (Figure 3). ***Loosely*** route slack around storage spools as shown to allow for movement of drawer.

Step 4: Feed the connectorized fan-out body through the opening at the back of the layer and temporarily place the fan-out body and pigtails on the housing.

Step 5: Lift the platform support arm and slide it back into its stored location as you lower the platform to the closed position.

6.3 Mount Fan-out Body with Connectorized Pigtails

Step 1: With one hand beneath the drawer, turn the plunger actuator knob to release the plungers holding the drawer (figure 4)

IMPORTANT: *The drawer may drop suddenly. Use your hand to gently lower the drawer.*

Step 2: Open the hinged flap covering the adapter panel field. Disengage plunger holding hinged flap to adapter layer and open the flap to expose adapters.

Step 3: Attach the fan-out body(ies) to the bracket at the back of the housing (figure 4) with a cable tie as shown. Attach the fan-out body with the shortest fiber lengths directly against the vertical portion of the bracket (the rear of the bracket). Lay the fan-out body with the longest pigtails against the first one and secure with cable tie.

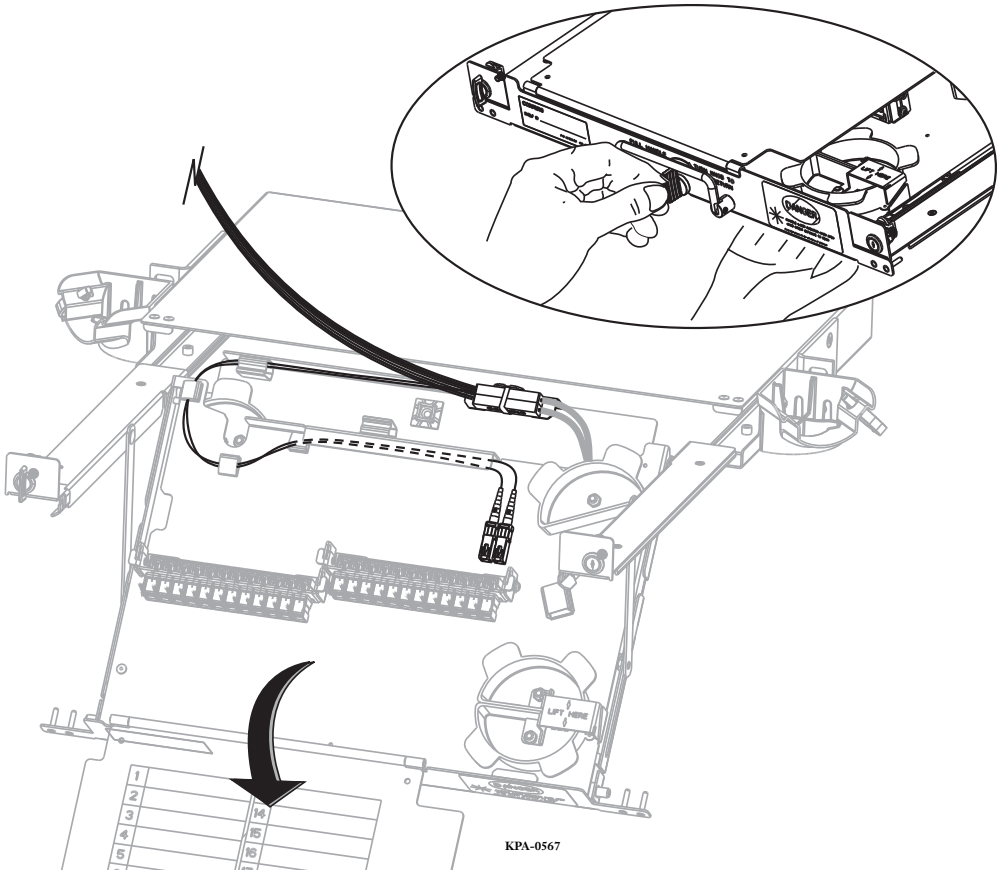

Figure 4 — Lower the Drawer

Step 4: Lay the pigtails out in order by length. The pigtails will be installed into the adapters starting with the longest lengths and ending with the shortest lengths, beginning in the first adapter on the right (adapter 24).

Step 5: Starting with the longest length pigtail, remove dust caps from the connectors and adapter into which it will be inserted and clean each following standard company practices. Insert the first connector into the first adapter on the right (adapter 24), paying attention to the key location on the connector.

Step 6: Continue installing connectors from right to left, going from longest to shortest lengths (adapter 1). Secure the pigtails in the clips as necessary, avoiding pulling on the pigtails. A typical installation is shown in Figure 5.

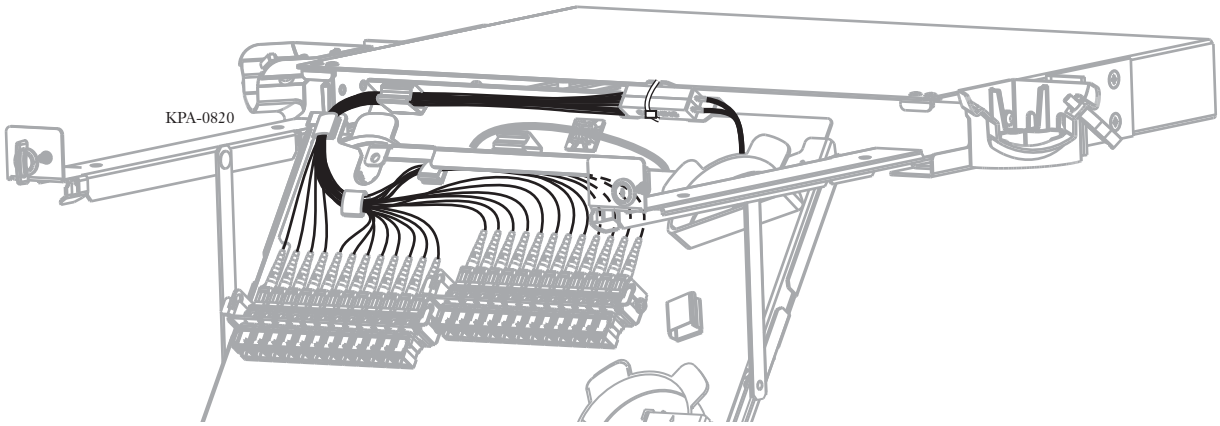

Figure 5 — Completed Installation of IFC Connectors

6.4 Install Inline Attenuators (Optional)

Open the drawer as described in Section 6.3.

6.4.1 In Adapters 1 through 12

Step 1: Remove connector from the rear of the adapter (Figure 5), insert connector into attenuator, then insert attenuator into the adapter.

Step 2: Readjust fiber slack to avoid pinching or pulling when the drawer is closed.

Step 3: Proceed to Section 6.5

6.4.2 In Adapters 13 through 24

Step 1: Remove dust cap from the front of the adapter; insert inline attenuator into the front of the adapter.

Step 2: Proceed to Section 6.5

6.5 Route Distribution Jumpers into the Housing

Step 1: Bring Distribution jumpers around the radius protection guide into the housing from the right side (Figure 6).

Step 2: Remove dust caps from the connector and appropriate adapters to be mated. Clean both the connector end-face and the adapter per standard company practices.

Step 3: Insert the connector into the adapter, paying attention to the key location on the connector (Figure 6).

Step 4: Record connections on the label located inside the adapter panel flap.

Step 5: Store jumper slack around the radius control guides to the right of the adapter field.

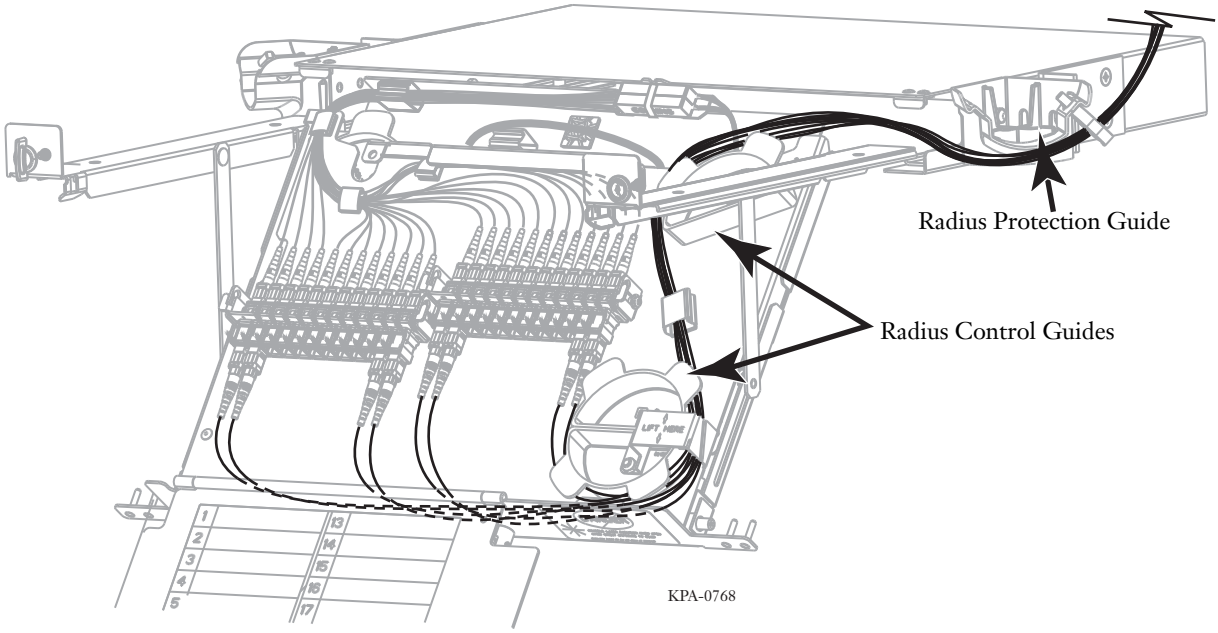

Figure 6 — Route Jumpers to Adapters and Mate

7. COMPLETING INSTALLATION

Step 1: Close the flap covering the adapter fields. secure the plunger at the back left corner of the flap.

Step 2: Lift the drawer up to a horizontal position. Turn the plunger actuator and ensure the plungers are engaged to hold the drawer up.

Step 3: Slide the drawer back into the housing. ensuring that no fibers are crimped in the process. Lock, if applicable

Step 4: Route jumper and ribbon slack around the radius protection guides on either side of the housing. Store any additional jumper slack on the frame or in a slack storage shelf per standard company practices.

8. TESTING

8.1 Provisioning Tests

Equipment should be tested from the source (or central office) to receiver at the time of provisioning to verify signal continuity and acceptable loss limits. Use an optical power meter to verify signal continuity and determine loss measurements are within specified local standards.

8.2 Troubleshooting Tests

An optical power meter can be used to perform the first step in troubleshooting. A power meter designed for measuring only dBm power levels is suitable for maintenance purposes.

For high attenuation:

- Remove connector and reclean connector and adapter.
- Verify cable ties are not too tight.
- Maintain appropriate fiber bend radius. Make sure there are no sharp bends.

Once a fault is isolated to the installed cable link, an OTDR (Optical Time Domain Reflectometer) is needed. An OTDR can locate fiber events and measure the losses attributable to cable, connectors, splices, and/or other components. The graphical display of loss over a cable's entire length provides the most revealing analysis and documentation available on a cable link, commonly referred to as its signature trace. Corning Cable Systems recommends performing an OTDR analysis to document the integrity of the cable system, locate and measure each event or component, and uncover faults throughout the cable. Follow the instructions provided with the OTDR tester you are using.

9. GROWTH

If the housing is not fully populated with the maximum number of connections at the time of installation, additional connections may be added until the housing reaches its capacity.

10. MAINTENANCE

The unit requires very little maintenance to ensure fibers and parts remain in good condition.

- External components may be cleaned occasionally with a damp, nonabrasive cloth.
- Check nuts, bolts, and screws; tighten as needed.
- Check fiber optic cable to make sure bends do not exceed the minimum bend radius.
- Check cables for unnecessary strain, for crimping or crushing at entries and exits, and for damage.
- Check unit record labels to make sure all are clear and accurate.

Corning Cable Systems LLC • PO Box 489 • Hickory, NC 28603-0489 USA
1-800-743-2671 • FAX +1-828-325-5060 • International +1-828-901-5000 • http://www.corning.com/cablesystems

Corning Cable Systems reserves the right to improve, enhance, and modify the features and specifications of Corning Cable Systems' products without prior notification. All trademarks are the properties of their respective owners. Corning Cable Systems is ISO 9001 certified.
© 2007 Corning Cable Systems. All rights reserved. Published in the USA.
SRP 003-733 / February 2007