CORNING

EDGE™ Solution Modules in an Enhanced Management Frame

003-885-AEN, Issue 3

related literature | Search www.corning.com/opcomm. Click on “Resources.”	
003-794-AEN	EDGE™ Solution
003-888-AEN	EDGE Solution with 1U/2U/4U Fixed Trays
000-276-AEN	EDGE Secure Solutions FTTD Module
003-991-AEN	EDGE Port Replication Housing
003-892-AEN	EDGE and EDGE8® Solution Single Module Housing
003-1049-AEN	EDGE Solution Single Module Housing for Splicing
000-274-AEN	EDGE Splice Cassette/EDGE Field-Terminated Cassette
003-825-AEN	EDGE and EDGE8 Fiber Zone Boxes
006-407-QSG-AEN	Field Tool for MTP™ PRO Connectors Quick Start Guide

1. Carton Contents

- EDGE™ solution module

2. Tools and Materials

- Phillips screwdriver (number 3)
- (4) screws, thread-cut, 12-24 x 0.5-inch, pan-head phillips

3. Precautions

WARNING: Isopropyl alcohol is flammable with a flashpoint at 54ºF. It can cause irritation to eyes on contact. In case of contact, flush eyes with water for at least 15 minutes. Inhalation of vapors irritates the respiratory tract. Exposure to high concentrations has a narcotic effect, producing symptoms of dizziness, drowsiness, headache, staggering, unconsciousness and possibly death.

4. Installation

4.1 Mounting EDGE Module Housing into an Enhanced Management Frame (EMF)

Step 1: Mount empty housings starting at bottom of frame to the left or right of the hub, as appropriate for your housing.

Step 2: Secure housing to frame with the screws provided.

Step 3: Snap fiber guides onto inner side of the housing.

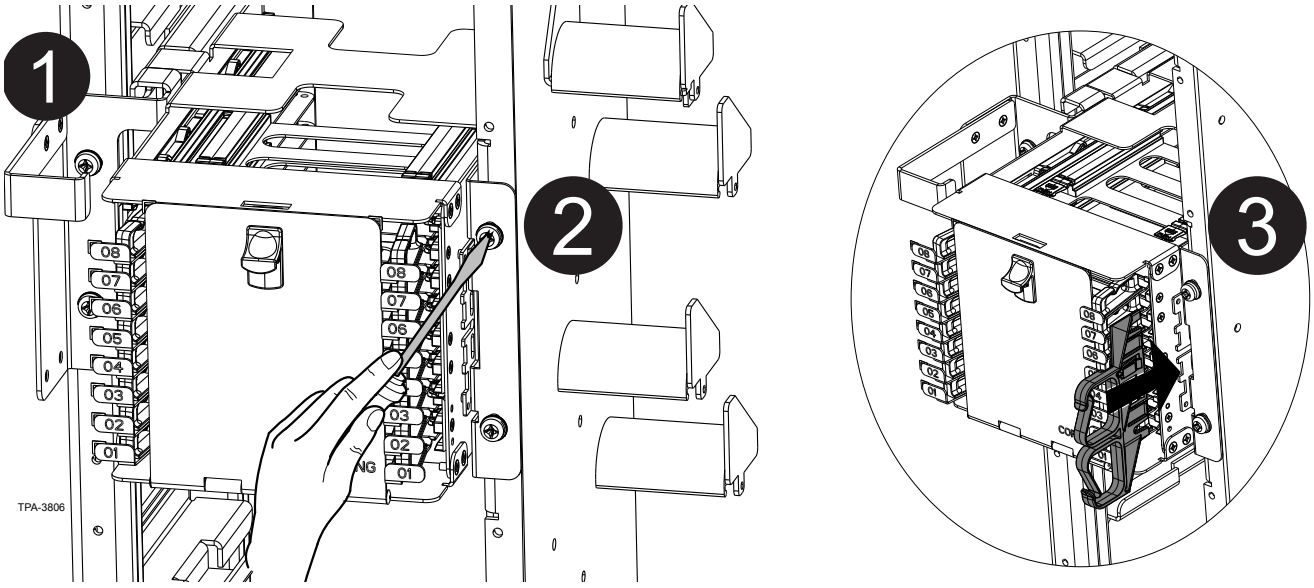

4.2 Installing EDGE™ Modules

Step 1: Open housing front door and pull tray forward.

Step 2: Insert module into the number 1 position until it latches.

Step 3: Repeat for all modules, loading from number 1 to number 8 position, bottom to top in the housing.

Step 4: Slide tray back into housing. Close and latch front door.

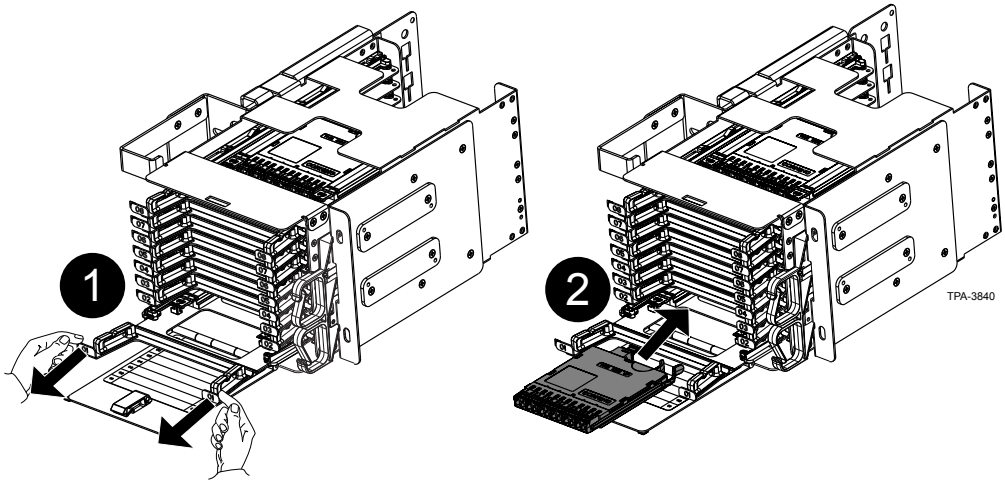

4.3 Connecting Trunk Furcation Body

The trunk cable may enter the rear of the housing from the top or bottom, and from either the left or right sides of the housing. The trunk furcation mounting bracket has been factory-installed for cable entering the housing from the bottom.

Step 1: If the cable will enter from the top, remove the mounting bracket, turn it over, and reattach it to the housing with the same screws before attempting to mount the furcation bodies.

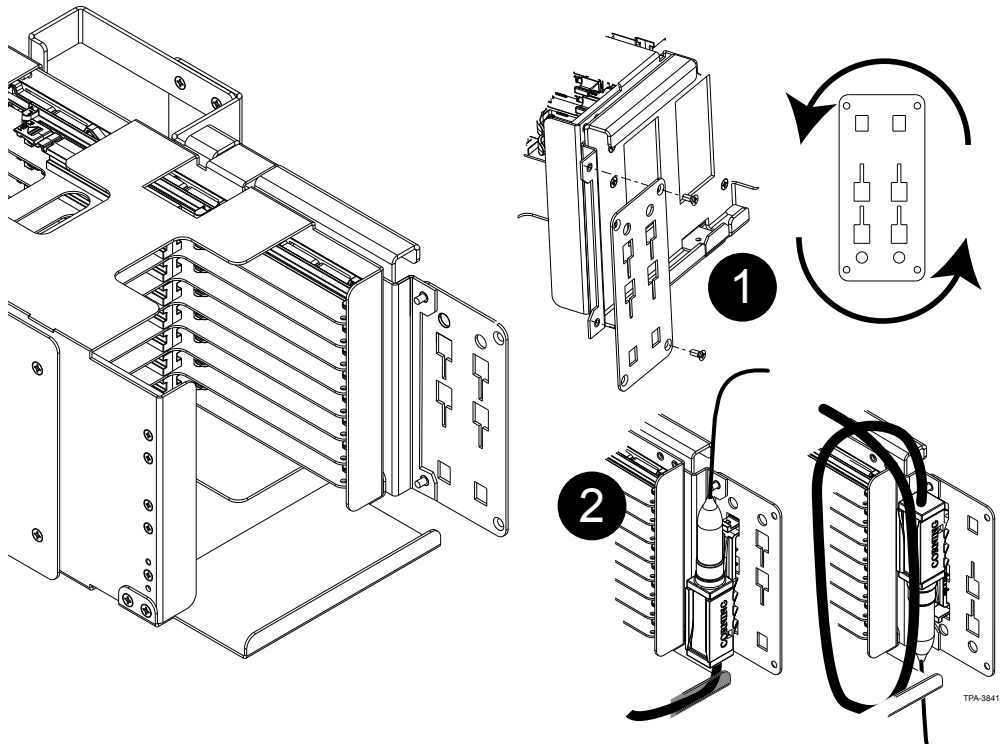

Step 2: Mount furcation body onto the mounting bracket on back of the housing using the EDGE™ furcation cradle.

Step 3: Form a loop in the fibers approximately 4 inches in diameter.

- The coil direction depends on the entry point of the trunk cable.
- Form the loop with the coil and connectors closest to the housing.
- Secure the loop with a tie or hook-and-loop strap about 8 inches from the connectors.

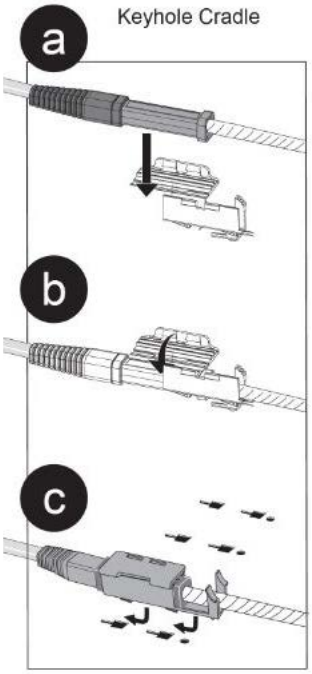

Step 4: Remove the MTP connector dust cap by pulling on the dust cap while holding the connector body. For the initial mating, do not clean or scope connectors. With Corning CleanAdvantage®, connectors are shipped with an optimized dust cap to maintain cleanliness for the first use.

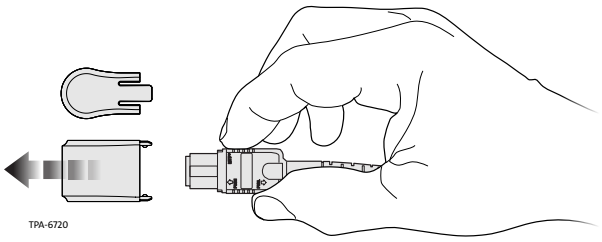

!	**CAUTION:** Scoping Corning CleanAdvantage connectors increases the risk of adding contamination to the system. CleanAdvantage technology is designed for mating connectors without cleaning or scoping before the initial installation.

Step 5: Mate the connectors into the rear of the module.

NOTE: Ensure that there is enough slack on the connector side of the coiled slack loop to allow the trays to be pulled forward from the front (approximately 4 inches).

Step 6: Place slack coil in the tray provided in the back of the housing.

Step 7: If necessary, pull the slack coil out of the tray to access the MTP connections again.

4.4 Connecting Jumpers — Initial Mating

Step 1: Open front door and pull tray forward, being sure not to pull on the trunk cable in the rear.

Step 2: Route jumpers out of the tray and through the fiber management fingers on the inner side of the housing next to the hub.

Step 3: Route and manage the remaining jumper slack storage as decribed in the installation instruction 003-599, Section 3, for the EMF.

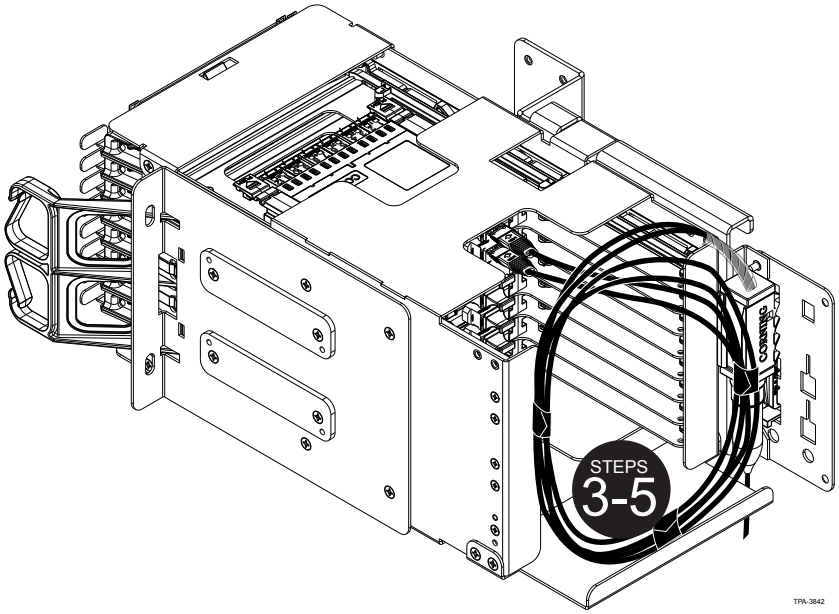

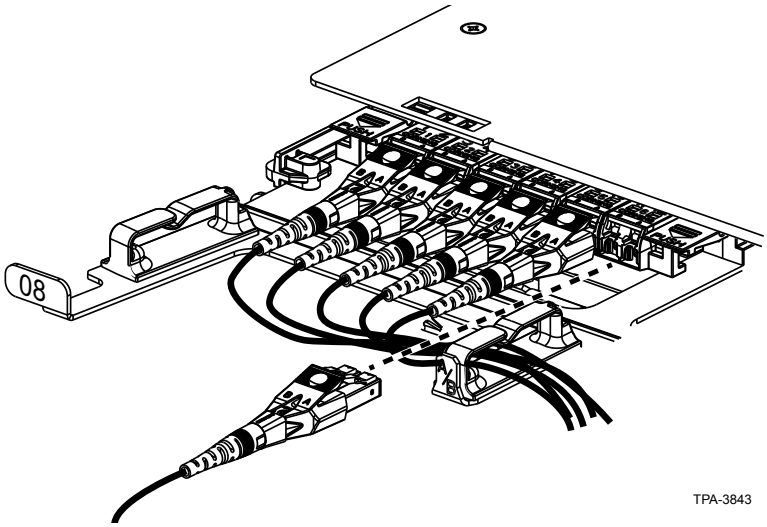

5. Connector Care and Cleaning — Post Initial Mating

NOTE: *Connector care and cleaning should only be necessary after the initial connector mating during testing and troubleshooting of the network.*

a. Clean connectors and adapters using the recommended cleaning tools or kits for the connector type.
   - LC connector and adapter cleaning: use cleaning tool part number CLEANER-PORT-LC
   - MTP connector and adapter cleaning: use cleaning tool part number 2104466-01

b. Always keep dust caps on connectors and adapters when not in use.

c. Ensure dust caps are clean before reuse.

d. When troubleshooting, clean the connector before re-mating, especially for test equipment patch cords (jumpers).
   - Be sure to clean both connectors that are being mated.

Corning Optical Communications LLC • 4200 Corning Place • Charlotte, NC 28216 USA
800-743-2675 • FAX: 828-325-5060 • International: +1-828-901-5000 • www.corning.com/opcomm

Corning Optical Communications reserves the right to improve, enhance, and modify the features and specifications of Corning Optical Communications products without prior notification. A complete listing of the trademarks of Corning Optical Communications is available at www.corning.com/opcomm/trademarks. All other trademarks are the properties of their respective owners. Corning Optical Communications is ISO 9001 certified. © 2011, 2016, 2020 Corning Optical Communications. All rights reserved.