Sheath Removal Procedure for Corning Cable Systems MIC® 250 Cable

1. General

1.1 This practice describes how to remove the sheaths or "jackets" of a Corning Cable Systems MIC 250 cable and prepare the cable's optical fibers for termination.

Note: *Before attempting this procedure, completely read and understand this document.*

1.2 MIC 250 cables are versatile, high performance cables designed to facilitate specific pre-connectorized cable assembly applications. MIC 250 cable is available with both single-mode and multimode optical fiber. Select configurations of this cable can be provided with an interlocking armor outer jacket for additional mechanical protection.

1.3 MIC 250 cable incorporates color-coded 250 µm optical fibers into a flexible cable design without a preferential bending axis. The optical fibers are segregated into sub-units of 12 (Figure 1). The outer cable jacket and sub-unit jacket are easily accessible using standard tools and maintenance

1.4 If this document is reissued, a summary of changes will appear in this paragraph.

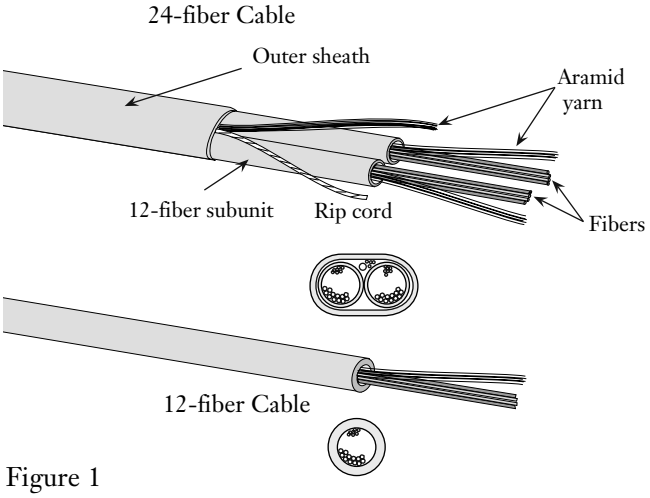

Figure 1

2. Precautions

2.1 General Precautions

Safety Glasses

WARNING: *The wearing of* ***safety glasses*** *to protect the eyes from accidental injury is strongly recommended when handling chemicals and cutting fiber. Pieces of glass fiber are very sharp and can easily damage the cornea of the eye.*

2.2 Cable Handling Precautions

CAUTION: *Fiber optic cables are sensitive to excessive pulling, bending and crushing forces. Excessive bending will cause kinking which may damage the fibers inside – the cable may have to be replaced.*

2.3 Fiber Handling Precautions

WARNING: *Cleaved glass fibers are very sharp and can easily pierce the skin. Do not let cut pieces of fiber stick to your clothing or drop in the work area where they can cause injury later. Use tweezers to pick up cut or broken pieces of the glass fibers and place them on a loop of tape kept for that purpose alone. Good housekeeping is very important.*

3. Tools and Materials

3.1 In addition to safety glasses, the following tools from the M67-003 Fusion Splicing Tool Kit are required for this procedure:

- Tape measure (p/n 100305-01)
- Permanent marker (p/n 2102003-01)
- Scissors (p/n 100294-01)
- For 24- fiber cables:
  Ideal stripper (Ideal catalog # 45-164)
- For 12- fiber cables and sub-units:
  Ideal stripper (Ideal catalog # 45-163)
- Fiber optic stripping tool (p/n 3205004-01)
- Phillips head screwdriver (p/n 100332-01)
- 2-in. slotted screwdriver (p/n 100302-01)

4. Outer Sheath Removal of 24-Fiber Cables

Note: *If you are working with a 12-fiber cable skip to step 5.1.*

4.1 Determine the jacket removal length required for the hardware or installation you are working on.

Measure and mark this length from the end of the cable's outer sheath using a tape measure and a permanent marking pen (Figure 2).

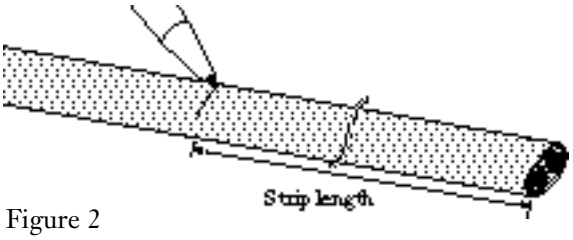

Figure 2

4.2 Before using the large Ideal stripper, make sure that it is properly adjusted. Use a screwdriver to adjust *one* of the blades on the side of the cable stripper so that it seats against the lower jaw but does not force the jaw open (Figure 3). *Leave the blades on the front and other side of the tool fully retracted so that they do not extend into the grooves of the lower jaw.*

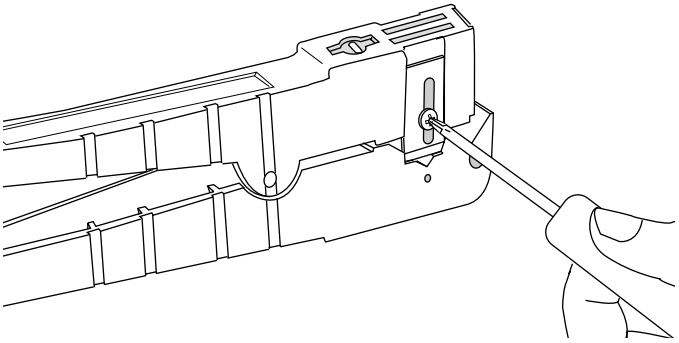

Figure 3

4.3 To score the outer sheath:

a) Open the tool by squeezing its handles together and place the stripper's blade on the sheath at the strip length mark.

b) Hold the cable steady with one hand to prevent it from twisting.

c) Use your other hand to rotate the tool around the cable sheath one complete turn to score it (Figure 4). Remove the tool from the cable.

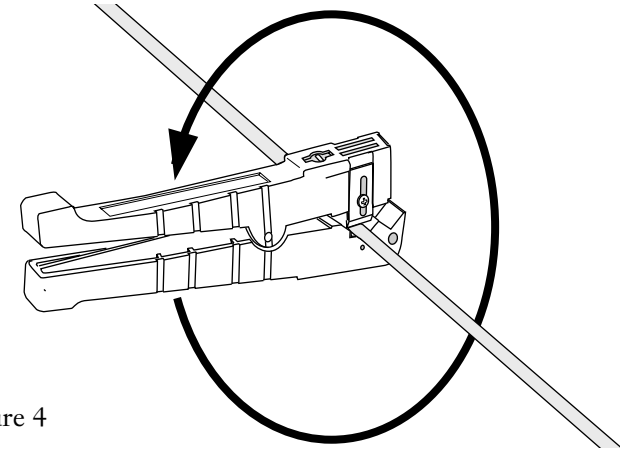

Figure 4

d) Carefully flex the cable sheath to break it at the score point (Figure 5). Slide the severed section of sheath off the sub-units.

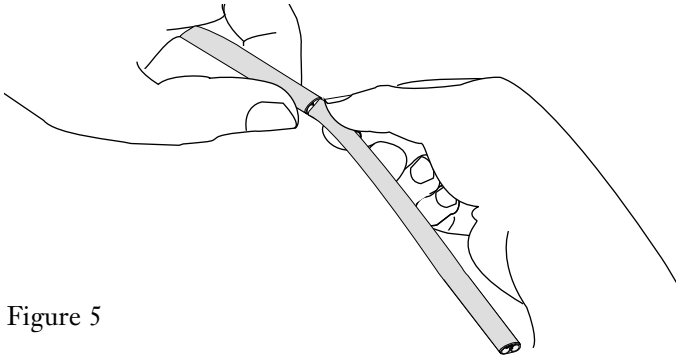

Figure 5

4.4 Use scissors to cut the aramid yarn to the length required for cable strain relief in your installation. Trim the rip cord flush with the outer jacket (see Figure 6).

4.5 Refer to Section 5 for sub-unit sheath removal.

5. 12-Fiber Cable and 12-Fiber Sub-unit Sheath Removal

5.1 Determine the jacket removal length required for the hardware or installation you are working on.

Measure and mark this length from the end of the sheath using a tape measure and a permanent marking pen (Figure 6)

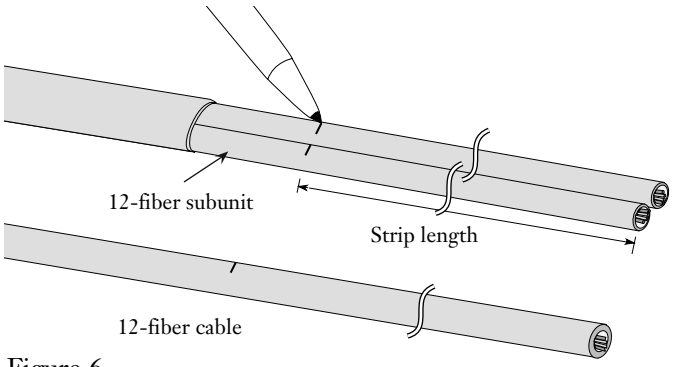

Figure 6

5.2 Before using the small Ideal stripper, make sure that it is properly adjusted. Use a screwdriver to adjust *one* of the blades on the side of the buffer tube cutter so that it seats against the lower jaw but does not force the jaw open (Figure 7).

Leave the blades on the front and other side of the tool fully retracted so that they do not extend into the grooves of the lower jaw.

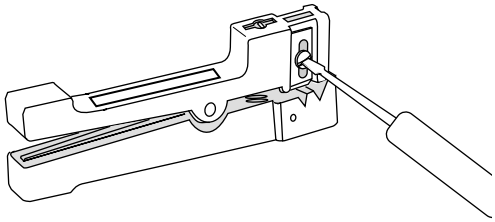

Figure 7

Note: *To minimize damage to the fibers inside the sub-unit or cable, always use the tool to score the sheath,* ***not*** *ring-cut completely through it.*

5.3 To score a 12-fiber cable or sub-unit:

a) Open the tool by squeezing its handles together and place the stripper's blade on the cable at the desired scoring point.

b) Hold the cable steady with one hand to prevent it from twisting.

c) Use your other hand to rotate the tool around the cable one to score it (Figure 8). Remove the tool from the cable.

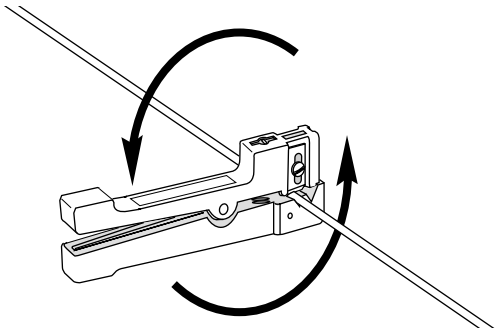

Figure 8

d) Carefully flex the cable sheath to break it at the score point (Figure 9).

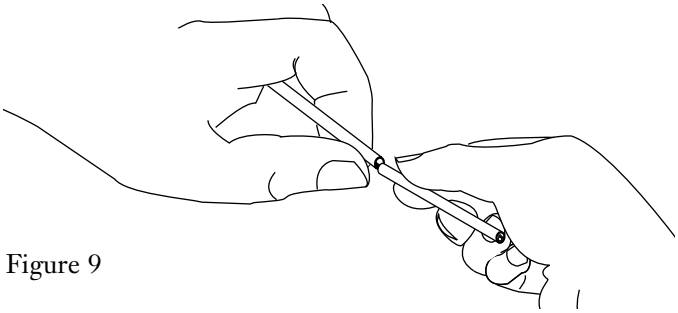

Figure 9

5.4 Once you have determined the number of rotations needed to score the cable, place the tool at the actual score point and carefully repeat steps a) through d).

5.5 Slide the scored section of sheath off of the fibers.

5.6 Use scissors to cut the aramid yarn to.the length required length for strain relief in your application.

5.7 Determine the 250 µm coating strip length for your application. Separate the fibers and select one to strip, using a fiber optic stripping tool as described in the tool's instructions, SRP-005-006 (Figure 10).

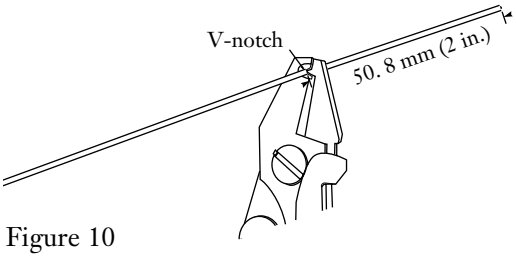

Figure 10

Special Note: Fiber Optic Training Program

Corning Cable Systems offers comprehensive, integrated training programs. Courses are structured for: Telephony, CATV, LAN, Intelligent Transportation Systems and Power Utilities.

For information on Engineering Services Training call: 800-743-2671.

Printed in U.S.A.

Corning Cable Systems
PO Box 489
Hickory, NC 28603-0489 USA
For US and Canada 1-800-743-2673
International 828-901-5000
FAX: 828-901-5973
http:www.corning.com/cablesystems