CORNING

AnyLAN™ Systems Distribution Cable Assembly Placing - Lashed Aerial

cat. number 005-080, Issue 1

revision history |

Issue	Date	Reason for Change
1	April 2010	Initial Release

Related literature |

SRP-005-085	AnyLAN™ Systems Distribution Cable Assembly Placing - Duct
SRP-004-123	Removal Instructions- Plug & Play™ AnyLAN™ Systems Pre-Term Cable Assembly
LAN-731-EN	Plug & Play™ AnyLAN™ Systems

Admonishments |

The precautionary terms used by Corning Cable Systems in its standard recommended procedures conform to the guidelines expressed in the American National Standards Institute document (ANSI Z 535) for hazard alert messages. Alerts are included in this instruction based on the following:

DANGER: *indicates an imminently hazardous situation which, if not avoided, will result in death or serious injury*.

WARNING: *indicates a potentially hazardous situation which, if not avoided, could result in death or serious injury*.

CAUTION: *indicates a hazardous situation which, if not avoided, may result in minor or moderate injury.*

Table of Contents |

1. General..... 2

2. Precautions..... 3
   - General Safety Precautions..... 3
   - Occupational Precautions..... 4
   - Cable Handling Precautions..... 5

3. Planning and Preparation..... 7
   - Tether Access Points and Pole Alignment Markers..... 7

continued on next page

Table of Contents continued

4. Lashed Aerial Plant - An Overview..... 10
Suspension strands (messenger wires)..... 10
Overlashing..... 11
Bonding and grounding..... 12
Pulling grips..... 12
Drip loops..... 13
Lashers..... 14
Deadends and crossovers..... 18
Splicing and slack storage..... 19
Packaging Removal..... 20
Storing partial cable reels..... 20

5. Installation Methods - Equipment Requirements..... 21

6. Moving Reel (Drive-Off) Method..... 22

7. Stationary Reel Method..... 26
Cable reel placement..... 26
Strand preparation..... 28
Back-pulling by hand..... 30
Winch-assisted pulls..... 31
Back-pull lashing..... 34

8. Combination methods..... 35

9. Post-installation Inspection..... 37

1. General

1.1 This procedure provides general information for aerial installation of a Corning Cable Systems AnyLAN™ Systems cable assembly. These methods and instructions are intended only as guidelines, as each installation will be influenced by local conditions. It is assumed that the reader is experienced with aerial cable placement.

1.2 As with many communication cables, AnyLAN Systems fiber optic cables used in aerial applications frequently rely upon stranded steel wires known as messengers or suspension strands for support. This procedure outlines the use of both dedicated messengers (a strand installed solely for the fiber optic cable), and "overlashing" installations in which a fiber optic cable is lashed to a copper or fiber optic cable already in place on a strand.installation.

1.3 Two basic methods of lashed aerial plant installation are outlined in this procedure:

- The drive-off or moving reel method, used when the entire route can be traversed by reel carrying vehicles; the fiber optic cable is raised and lashed to the strand in one operation.
- Back-pull, pull-in, or stationary reel methods, used for cable routes which are inaccessible to vehicles; the cable is pulled into place beneath the strand and temporarily suspended by cable blocks. Lashing begins at the far-end of the run and the lasher is pulled back towards the fixed-location reel at the beginning of the cable pull.

1.4 This procedure also describes variations and a combination of these two methods which can be used when cable route restraints prevent the use of the moving reel method for the entire installation.

1.5 While the methods used for placing AnyLAN™Systems aerial fiber optic cable are essentially the same as those used for placing copper cable, there are important differences which must be recognized by the craftsman. Fiber optic cable is a high capacity transmission medium whose qualities and characteristics can be degraded when it is subjected to excessive pulling tension, sharp bends, and crushing forces (see 2.5, Cable Handling Precautions, for specifications).

1.6 Corning Cable Systems can provide cable in continuous lengths up to 7.5 miles (12 kilometers). Generally, entire reels of cable can be placed without splice points, minimizing transmission loss and reducing splice costs.

1.7 For aerial installations that are exposed to possible squirrel and/or other rodent damage, please follow the appropriate aerial squirrel/rodent guard installation procedure as recommended or required by one's employer.

1.8 This practice may contain references to specific tools and materials in order to demonstrate a particular method. Such references are in no way intended as product endorsements.

2. Safety Precautions

2.1 This section provides safety precautions which should be observed when working with aerial plant. These practices may change, or may not be suitable in a specific situation, and so are suggested guidelines only. Your company's safety precautions and practices take precedence over any conflicting recommendations given in this document.

CAUTION: *Before starting any aerial cable installation, all personnel must be thoroughly familiar with all applicable Occupational Safety and Health Act (OSHA) regulations, the National Electrical Safety Code (NESC), state and local regulations, and company safety practices and policies. Failure to do so can result in life-threatening injury to employees or the general public.*

2.2 General Safety Precautions

WARNING: *To reduce the chance of accidental injury:*

a) All personnel involved in the aerial placement must be thoroughly familiar with the operation of the equipment and construction apparatus being used.

b) Inspect all equipment (ladders, bucket trucks, reel trailers, etc.) for defects and replace if found in unsound condition.

c) Use only company-approved equipment for lighting, heating, and other operations.

d) Arrange or secure any material in a bucket truck or on a ladder so that it cannot fall. Materials and equipment should not unnecessarily impede pedestrian or vehicular traffic.

e) Allocate the appropriate number and type of safety personnel and equipment called for in your company's safety procedures. Such personnel and equipment may include:

- *Flagmen*
- *Pilot vehicles*
- *Roadside barricades, warning signs, traffic cones, beacon lights, etc.*
- *ABC-rated fire extinguishers on board all company vehicles.*

2.3 Occupational Precautions

WARNING: *Before starting any aerial cable placing operation, all personnel must be familiar with their company's safety practices concerning working near power lines, pole climbing, eye protection, safety headgear, and clothing. Failure to comply with such practices may increase the risk of injury.*

WARNING: *To reduce the chance of accidental injury:*

a) *Use protective leather gloves and, if necessary, lineman's rubber gloves. Use the leather gloves when climbing or descending a pole, and when working with sharp instruments or materials. Wear rubber gloves when working near exposed electrical circuits.*

b) *Use a safety harness on all bucket trucks and aerial lifts. A body belt and safety strap for the bucket or platform must be used when the equipment is in operation to minimize the chance of injury.*

c) *NEVER look into the end of the cable's optical fibers unless you are certain that no optical power is being coupled into the fiber; otherwise eye damage may occur. See 2.4 for laser precautions.*

d) *Before climbing a pole, inspect it for significant deterioration and safety hazards (splintering, insect nests, sharp protrusions, etc.).*

e) *Position all motorized equipment so that exhausts are directed away from the location where most work will be done.*

f) *Personnel normally should not remain in an area where a cable is being pulled around a piece of hardware under tension. A craftsman can remain in such an area (for example, to observe the alignment of a cable around a corner block), if he or she stays clear of the hardware under tension and has a clear path to safety.*

g) *Keep hands free of tools or materials when climbing or descending a pole or ladder. Do not step on cables, cable enclosures, or suspended equipment which might provide unsafe footholds.*

h) *Always lower cable blocks and other equipment from strand level with a handline.*

2.4 Laser Precautions

WARNING: *Laser light can damage your eyes. Laser light may be invisible. Viewing it directly does not cause pain. The iris of the eye will not close involuntarily as when viewing a bright light. Consequently, serious damage to the retina of the eye is possible.*

NEVER LOOK INTO A FIBER WHICH MAY HAVE A LASER COUPLED TO IT. Should accidental eye exposure to laser light be suspected, arrange for an eye examination immediately.

2.5 Cable Handling Precautions

WARNING: *Unrestrained cable ends may cause injury to your eyes or body and damage the cable, fitting, or fibers if suddenly released from a coil (Figure 1). Wear eye protection and use extreme care when handling a tether which uses flat-drop cable - gently release the energy stored in the cable coil to avoid possible personal injury or damage to the cable or fitting components.*

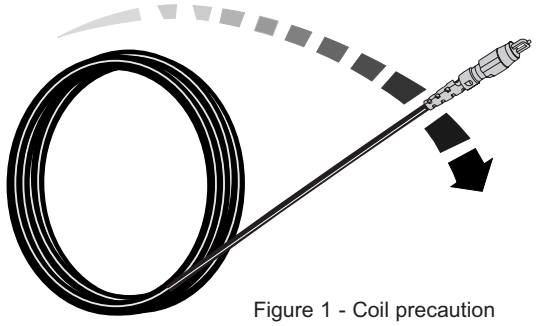

Figure 1 - Coil precaution

CAUTION: *Care must be taken to avoid cable damage during placement and handling. Fiber optic cable is sensitive to excessive puling, bending and crushing forces. Any such damage may alter the cable's characteristics to the extent that the cable section may have to be replaced. To ensure all specifications are met, consult the cable specification sheet for the cable you are installing.*

2.6 The following may be used as a general guideline for maximum pulling tension for standard, non-connectorized Corning Cable Systems outdoor fiber optic cable:

2,700 N (600 lbs)

2.7 All Corning Cable Systems cables up to 0.9 inch (23.0 mm) nominal cable diameter can be installed using a 20 inch (50 cm) diameter wheel. Corning Cable Systems recommends a minimum bend radius of *15* times the cable diameter during installation and *10* times the cable diameter when placed.

Examples: **Cable diameter x 15 = bend radius (during installation)**

0.75 in. (19 mm) x 15 = 11.25 in. (28. 6 cm)

All pulling equipment and hardware that will contact the cable during installation must maintain this respective minimum bend radius.

Cable diameter x 10= bend radius (placed)

0.75 in. (19 mm) x 10 = 7.5 in. (19 cm)

2.8 Situations which require the use of radius maintaining devices include the following:

- when cable is placed on blocks, sheaves, or quadrant blocks.
- at all bends of the cable route.

Note: *Carefully select hardware that maintains cable bend radius. Not all equipment is well suited for fiber optic cable installation. Consult your company's standard operating procedures for details.*

2.9 Before the installation begins, carefully inspect the cable reels for imperfections such as nails and broken flanges which might cause damage to the cable as it is unreeled.

2.10 Exercise care to prevent damage to cables while setting up equipment or while using tools of any kind. Be extremely careful when handling cable reels or loading reels on trailers or vehicles.

2.11 Leave cable reel packaging on the cable reels until they arrive at the cable site. If the packaging has been previously removed, securely fasten the cable end(s) to avoid damage during transit. If the cable ends are not secured, vehicle bouncing can cause the cable to loosen on the reel, resulting in kinks, irregular cable bundles, or crosswraps.

2.12 Establish good communications between the pull, feed, and monitoring locations before starting any installation. This is especially critical when a winch is used to pull the cable.

2.13 Avoid surges and jerks of the reel at all times. Properly adjusted reel brakes should be used in all installations.

2.14 To prevent damage to the cable and ensure lowest possible tensile load (drag), cable reels should be attended while the cable is being pulled.

2.15 If the cable must be unreeled during installation, use the "figure-eight" configuration to prevent kinking or twisting. *Fiber optic cable should not be coiled in a continuous direction except for lengths of 100 feet (30 meters) or less.* The preferred size of the "figure-eight" is about 15 feet (4.5 m) in length, with each loop about 5 feet (1.5 meters) to 8 feet (2.4 meters) in diameter. Traffic cones spaced 7 - 8 feet apart are useful as guides during "figure-eighting."

Note: *When "figure-eighting" long lengths of cable, take steps to relieve pressure on the cable at crossover of the eight. This can be done by placing cardboard shims at the crossover, or by forming a second "figure-eight"* (Figure 2). *If the "figure-eight" must be flipped over to obtain the pulling eye, it can be easily accomplished by three men, one at each end and one in the center. The cable can then be pulled off the "figure-eight" the remaining distance.*

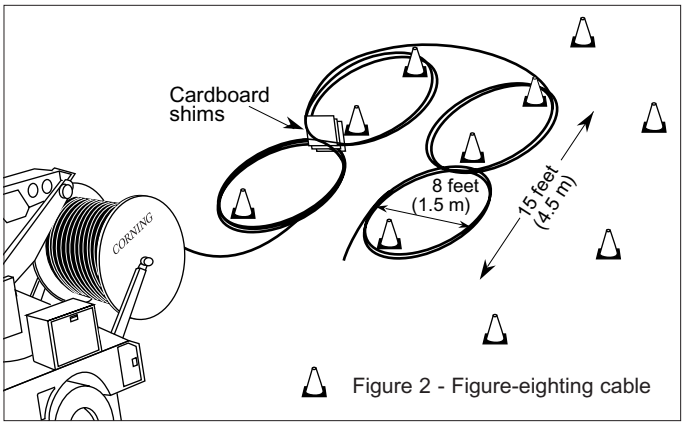

Figure 2 - Figure-eighting cable

WARNING: *It has been experimentally determined that the use of "figure-eight" machines will damage Corning Cable Systems armored and SST cable designs, and use of such equipment on these cables is not recommended. Other similar cable designs may also be affected. Before using such a machine, contact the machine manufacturer for their recommendation on the suitability of their machine to the cable design being installed.*

2.16 DO NOT CUT THE CABLE UNDER ANY CIRCUMSTANCES without consulting the outside plant engineer on the job. Splice points for fiber optic cable are specifically designed into the route. Additional splice points must be approved by the construction supervisor prior to cutting the cable.

2.17 Take precautions to protect reeled cable from vandals or other sources of possible damage while unattended. The sections of cable intended for aerial installation are often produced to meet specific length requirements. Any damage to the cable sections may require replacement of the entire section.

2.18 If the cable is laid on the pavement/ground during installation, provide barricades or other means of preventing vehicular or pedestrian traffic in the area.

2.19 Do not increase the tension in a strand to which a fiber optic cable is already lashed.

2.20 At the completion of a day's installation, protect bare cable ends by placing a cable cap on the end of the cable, followed by several wraps of tape around each cap. This will assist the moisture-resisting material in Corning Cable Systems loose-tube cable in preventing water ingress due to long-term exposure to moisture. If a cap is not available, a few wraps of tape placed on the tip of the cable should prevent water from entering the cable.

Note: *If the cable ends are not capped while exposed to the environment for long periods of time, the customer may choose (but is not required) to cut off one meter of each cable end before splicing. This will ensure that no moisture ingress is present.*

2.21 Corning Cable Systems recommends the use of fiber optic cable warning signs for identification of the fiber optic plant. Reference your company's standard procedures for marking cable plant.

3. Planning and Preparation

3.1 Before beginning an aerial installation, the cable route must be surveyed jointly by engineering and construction personnel. The route survey will determine the installation method to be used, as well as equipment and material requirements. Representatives from each agency having jurisdiction over items such as traffic lights and overpasses should be present during the route survey. Identify potential problems with cable placement at this time. Examine and resolve the following issues during the planning stage in order to achieve a smooth installation of aerial plant.

Tether Access Points and Pole Alignment Markers

3.2 Regardless of the installation type, there will be orange Pole Alignment Markers (PAMs) used for proper positioning of the Tether Access Point (TAP) tethers and the cable itself. When the PAMs are properly positioned and assuming the cable pull is towards the central office (CO) from the field side (FS), the TAP access point itself will hang 6 feet from the pole towards the CO side. This allows the 5-foot tether (aerial, no innerduct installation tether length) at each TAP to reach the pole for connection of the multiport terminal (Figure 3) .

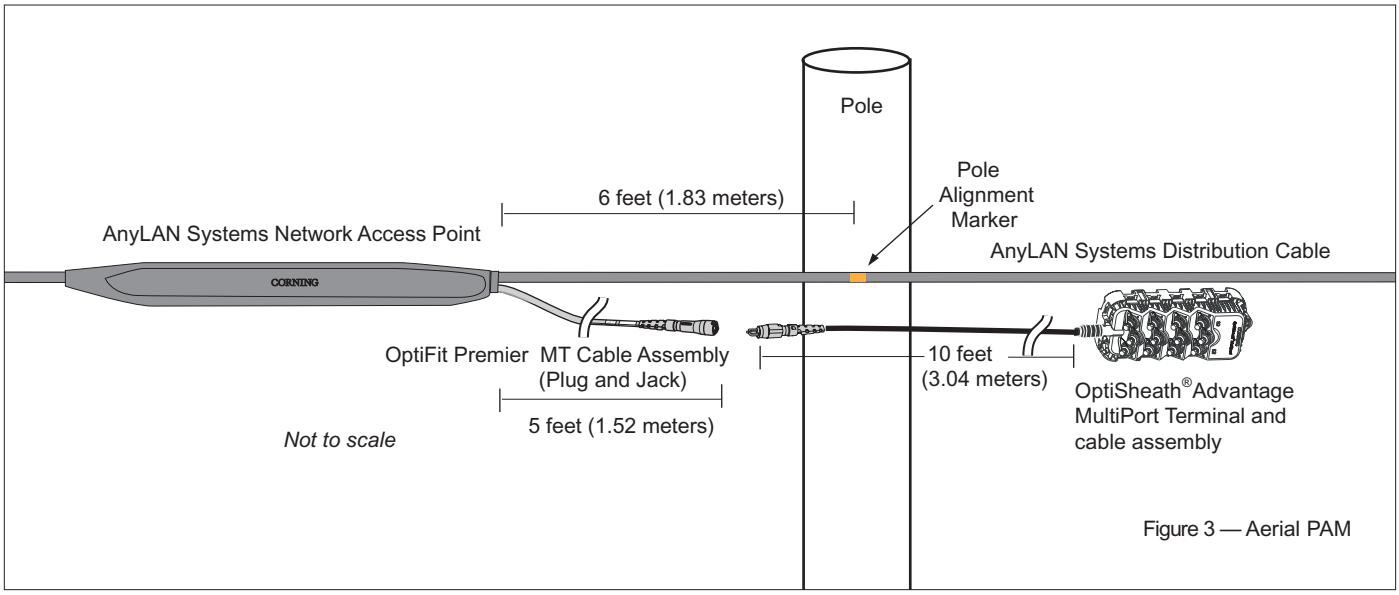

Figure 3 — Aerial PAM

Poles and Authorization

3.3 Determine the ability of existing pole lines and guys to support the new cable plant, as well as any restrictions imposed by the pole owner. The anchoring and guying of the cable plant is crucial for its safe operation. Ideally, the guying should remove all of the lateral stress on each pole so that the pole simply supports the weight of the cables, hardware and equipment attached to it. Follow your company's normal specifications concerning anchoring and guying of poles for copper plant.

3.4 Set new poles only when there is no existing utility line and when a reasonable alternate route does not exist. Explore alternate approaches such as underground trenching before making the decision to place new poles. Written permission must be obtained from the proper authorities before placing new poles, and all other utilities having underground plant in the area must be contacted so they can locate and mark their facilities prior to new pole placement. Keep copies of this written permission on-site as the pole-line is constructed.

3.5 Be certain to ensure proper clearance from electric power lines and other cables that may sag near the fiber optic cable. Determine the clearances between the proposed fiber optic cable plant and existing facilities on a case-by-case basis by referring to the National Electrical Safety Code (NESC) and appropriate local safety codes.

WARNING: *Notwithstanding the fact that NESC spacing is observed, there is still a danger of flashover (sparking) from a power line to the metallic messenger which may cause electrocution to installers of the cable. Hold a safety meeting between all involved parties to discuss a plan of action concerning the proper clearances required to ensure a safe outside plant installation.*

3.6 Verify messenger wire assignments. Because Corning Cable Systems fiber optic cable is light in weight and its sag in aerial span small, it should occupy the uppermost available communication space on the pole. Installation of aerial fiber optic cable routes on joint-use pole lines is possible if sufficient space is available to provide the required vertical clearance.

Rights-of-Way

3.7 Obtain the proper right-of-way clearances. Be certain this right-of-way is free of obstacles such as guy wires, trees, etc. Determine if the reel-carrying vehicle can be operated close to the cable route.

Never set up equipment on private property without obtaining prior permission from the property owner.

Installation Issues

3.8 Determine any special installation issues, such as railways, highways, and waterways. Outline procedures to contend with these issues. For aerial installations that are exposed to possible squirrel and/or other rodent damage, please follow the appropriate aerial squirrel/rodent guard installation procedure as recommended or required by one’s employer.

Scheduling

3.9 Develop a schedule for outside plant activities. Ensure coordination of this schedule with other project schedules (central office equipment, etc.). Prepare work orders for the new construction, maintenance, and rearrangements needed along the route.

Splice Locations

3.10 Select splice locations during the survey and make plans for closure and cable slack storage. Corning Cable Systems recommends that at splice points, installation crews leave enough cable slack on each cable end to reach the ground and into a splice vehicle, plus 16 feet (5 meters) (Figure 4). This cable slack must be taken into account when ordering cable lengths. Consider the accessibility of these splicing locations by splicing vehicles. These locations should not fall in sites where access is inconvenient or hazardous.

The preliminary choice of splice locations during the route survey allows verification of the transmission design and provides the basis for cable order lengths.

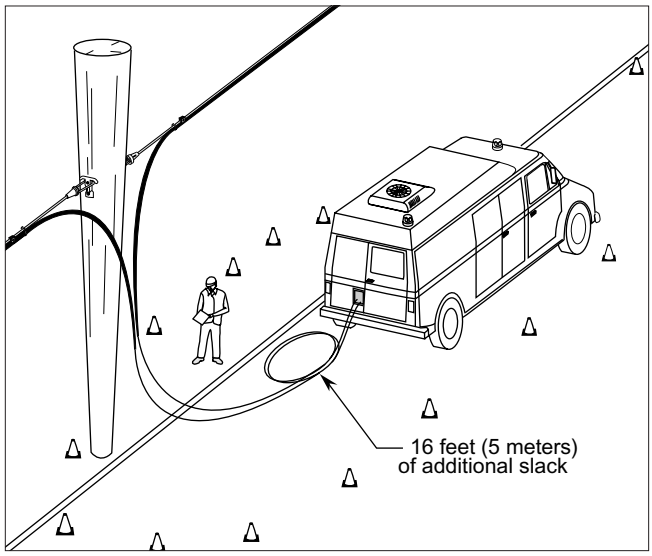

Figure 4— Splice location

If there are slack loops designed into the installation, the loops will be marked on the distribution cable by a pair of yellow **SL**ack **A**lignment **M**arker**s** (SLAMS) dictating the position and length of the slack loop (Figure 5).

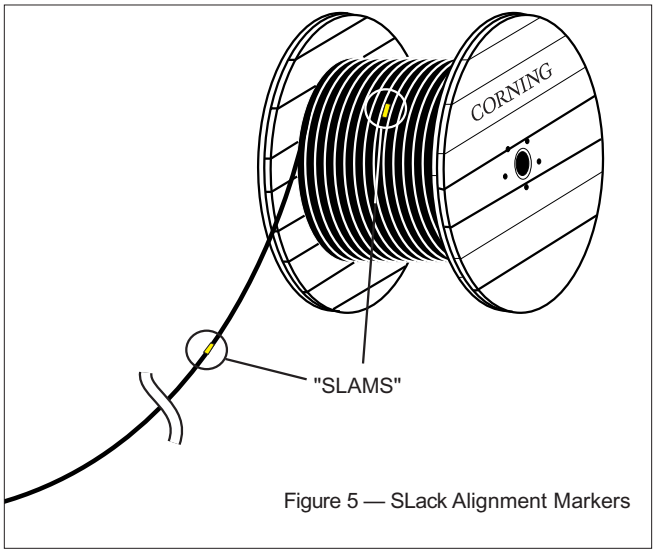

Figure 5 — SLack Alignment Markers

3.11 Develop a feasible placement plan for each reel of cable. Inspect the pull-off locations for suitability.

3.12 Planning must consider installation techniques such as back-pull versus drive-off, pulling two cables at once, single versus double lashing, overlashing, etc.

Materials Requirements

3.13 Determine quantities of cable and other materials which must be ordered. Tree trimming may be required to verify route suitability and accurate cable length. Special requirements for sequencing the cable shipments must be specified in the cable order.

4. Lashed Aerial Plant - An Overview

4.1 This section provides a general overview of lashed aerial plant. The elements of aerial plant discussed in this section are common to lashed aerial plant, regardless of the installation method used:

- Suspension strands (messenger wires)
- Overlashing
- Bonding and grounding
- Pulling grips
- Drip loops
- Lashers
  - Lasher operation
  - Transferring lashers around poles
- Deadends and crossovers
- Splicing and slack storage
- Storing partial cable reels

Suspension Strands (Messenger Wires)

4.2 Suspension strands used in telephony are classified by rated breaking strength and the type of steel used in their construction. Seven of the more common sizes are listed in Table 1. The "M" in the description indicates the approximate breaking strength in thousands of pounds; the "UG" (Utilities Grade) or "EHS" (Extra High Strength Grade), indicates the tensile strength of the steel used in the messenger.

Diameter (in inches)	Grade	Rating
1/4 in.	EHS	6.6.M
5/16	UG	6M
5/16	EHS	11.2M
3/8	UG	10M
3/8	EHS	16M
7/16	UG	16M
1/2	UG	25M

Table 1 Messenger Wires

4.3 For general applications, Table 2 shows the minimum stringing tensions for a particular cable weight category using different messenger grades.

The messenger tensions listed are the minimum tensions required for each span to reduce cable strain to an acceptable level.

Note: *Both tables 1 and 2 are based on the following assumptions:*

1) *use of a dedicated messenger (no overlashing);*
2) *heavy loading conditions*
3) *15°C (59°F) initial stringing temperature;*
4) *reasonably level terrain.*

Minimum and Critical Messenger Tensions in Pounds Prior to Aerial Installation of Corning Cable Systems Fiber Optic Cable

Maximum 0.18 lb/ft, 0.80 Inches Diameter Cable, (Using EHS Messenger, Not UG)

Messenger	Span (feet)			Critical Tension*
	Up to 200	200-300	300-400	
6.6M EHS (1/4 in)	1200	1600	—	2000
11.2M EHS (5/16)	1500	1800	2400	3000
16M EHS (3/8)	1800	2200	2600	6000

Maximum 0.16 lb/ft, 0.68 Inches Diameter Cable, (Using UG Messenger, Not EHS)

Messenger	Span (feet)			
	Up to 200	200-300	300-400	
6M UG (5/16 in)	1600	—	—	—
10M UG (3/8)	1800	2200	2500	—

*** Critical tensions and strand fatigue failures**

Table 2 Minimum and Critical Tensions

Caution: *Suspension strands are susceptible to fatigue failure near pole-mounted suspension clamps if left under critical stringing tensions without supporting a load. Because all standard Corning Cable Systems fiber optic cables weigh less than 0.4 pounds per foot, the strand is effectively under no load. Consult the strand manufacturer to determine the critical tension for the strand used in your installation. Often, by increasing the messenger size by one or two categories or by using vibration dampening weights on the span, the problem of fatigue failure can be avoided.*

4.4 Given the variables involved (messenger type and OD, cable weight and OD, loading conditions, span length, etc.) Corning Cable Systems can calculate the cable's sag and strain for specific aerial installations. Recommended tensions and messenger types can also be generated for these applications. Please contact Corning Cable Systems Engineering Services at 1-800-743-2671 for minimum recommended messenger tensions, as well as the resulting sag for specific applications.

4.5 Please note that when a suspension strand is specified for a fiber optic cable, the most important considerations are that the strand is strong enough, and that excess cable strain does not occur. When the diameter of a strand is enlarged to increase its strength, its weight and the effect of wind and ice loading is affected, which increases cable strain. Normally the "best" strand is not the question, but rather if the normal strand is satisfactory. Technically, the smallest EHS messenger with a satisfactory strength is "best."

4.6 When installing a dedicated suspension strand for fiber optic cable, standard hardware (eyebolts, clamps, etc.) should be used. Your company's normal messenger wire installation procedures (pole framing, hardware placement, etc.) should be used.

4.7 The final "slack-span," which is the span from the last pole outside a building to the building itself, is the only span which may be tensioned at lower than the critical value. Standard hardware for copper plant should be used to support this “slack-span.” Crew members should pay close attention to ensure that the minimum bend radius of the cable is not exceeded. If possible, the cable should enter the building through an existing entrance point.

Overlashing

4.8 An alternate to lashing a fiber optic cable to a dedicated messenger is to lash the cable to an existing lashed fiber optic or copper cable. This method of aerial cable placement -– "overlashing" – is attractive because the expense of providing a separate suspension strand for the fiber optic cable is avoided. Corning Cable Systems fiber optic cables can be overlashed to existing cables in many instances.

4.9 Corning Cable Systems can provide engineering guidelines for overlashed installations on a case-by-case basis. Briefly addressing all overlashed combinations is not possible because of the many variables involved. For rapid answers to your overlashed concerns, call Corning Cable Systems Engineering Services at 1-800-743-2671 with the information requested in Table 3.

4.10 After it has been determined that the existing strand is of sufficient size to support fiber optic cable, use a strand dynamometer to measure the strand tension in several strands. Follow your company's standard procedures concerning tensioning these strands. DO NOT place the strand at lower than recommended tension, as fiber transmission characteristics may be adversely affected.

IMPORTANT VARIABLES IN OVERLASHING CORNING CABLE SYSTEMS FIBER OPTIC CABLE

1) What is the maximum span length (pole spacing)?_____

2) a) What is the size of the existing messenger? _____

b) Is the messenger ____EHS or ___UG?

3) What is the weight and diameter of the existing copper (or fiber) cable(s)?_____

_____

4) What was the initial messenger tension ? _____
(If this number is not available, what is the present messenger tension? Measured at what temperature?) _____

5) What is the age of the existing copper (or fiber) cables? _____

6) What are the loading conditions ___(NESC heavy ___medium ___ light)?

7) What is the size of the fiber cable being installed (cable weight, diameter, etc.)?

_____

Table 3 Overlashing information

Bonding and Grounding

4.11 In order to maintain a high degree of safety and reliability in overhead plant construction, standards regarding grounding should be defined and followed. Corning Cable Systems recommends grounding of all metallic cable elements at splice points and building entry points; however, your company's normal specifications concerning the grounding of messenger wire and associated hardware/equipment should be followed.

Note: *Completely dielectric Corning Cable Systems fiber optic cables are typically chosen for aerial installations in order to prevent stray currents from being generated on the metallic members of the fiber optic cable from nearby power lines. Non-metallic lashing materials are available from several manufacturers.*

Pulling Grips

4.12 Corning Cable Systems offers AnyLAN™ Systems factory-terminated and tested distribution trunk cables which may be quickly installed in aerial overlash or self-supporting cable applications (Figure 6). The accessing of these protective pulling grips is described in SRP-004-123, *Removal Instructions- Plug & Play™ AnyLAN™ Systems Pre-Term Cable Assembly.*

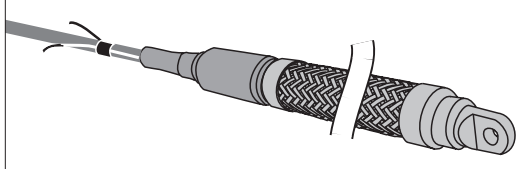

Figure 6 - AnyLan Systems Preterm cable assembly

4.13 For cables which are not preterminated, Corning Cable Systems recommends the use of a Corning Cable Systems GRP series (Kellems® grip) wire mesh pulling grip to provide effective coupling of pulling loads to the jacket, aramid yarn, and central member of fiber optic cables. The use of a swivel between the pull-line and pulling grip is required to prevent the pull-line from imparting a twist to the cable (Figure 7). For instructions on field installation, refer to SRP-005-044, *Installing a Wire Mesh Pulling Grip on ALTOS® Fiber Optic Cable*.

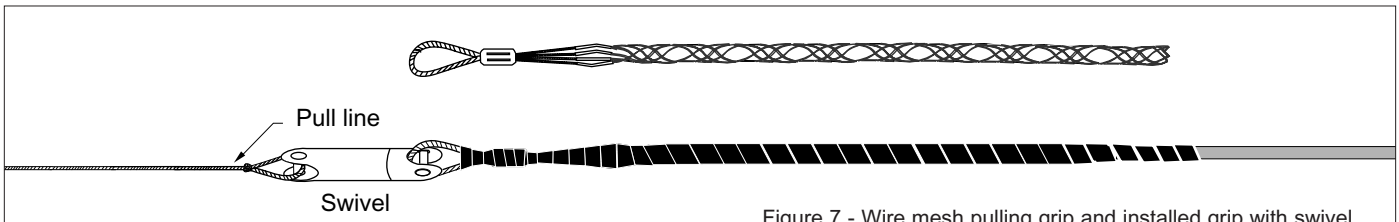

Figure 7 - Wire mesh pulling grip and installed grip with swivel

Drip Loops

4.14 Drip loops may or may not be used depending upon the normal practices of the installer. Corning Cable Systems cable design and construction provide ample protection for the optical fiber without drip loops in the cable plant.

Note: *Corning Cable Systems does not recommend the use of drip loops in applications where fiber optic cable is overlashed to existing coaxial cable. When fiber optic cable is overlashed to coaxial cable, expansion and contraction, coupled with other forces, can cause the fiber optic drip loops to move along the spans. While this movement does not affect either cable plant reliability or transmission quality, drip loop movement can detract from the overall appearance of the cable plant.*

4.15 When drip loops are not employed, care must be taken to prevent the cable from rubbing against the three-bolt suspension clamp. This can be accomplished by a larger spacer in the cable support strap or a split plastic tube surrounding the cable.

4.16 When drip loops are used, they must be the "smooth-curve" type -- under no circumstances should any other shapes by used. Figure 8 illustrates this shape and the minimum recommended dimensions of a drip loop.

4.17 In general, fiber optic cable drip loops are formed by hand. Hand forming of drip loops is permissible for fiber optic cable as long as the minimum bend radius of the cable and the dimensions illustrated in Figure 8 are not exceeded. Drip loops can also be formed by an expansion loop forming tool provided that the loop conforms to the specifications shown in Figure 8.

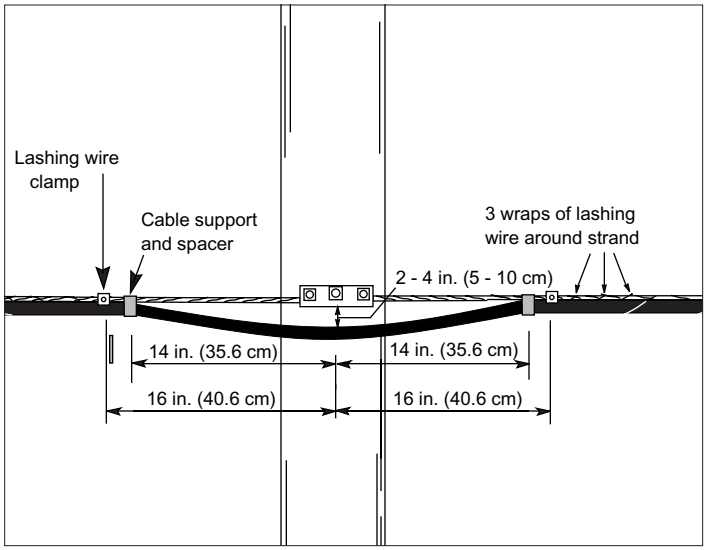

Figure 8 - Drip loop dimensions

Note: *Fiber optic cable does not react to hand forming like aluminum-sheathed, twisted-pair cables which bend at specific points rather than in a uniform manner over the length of the drip loop.*

4.18 Install drip loops during the lashing process under the following guidelines:

a) Straps and spacers should be used to support the cable in the absence of lashing wire support, and to hold cable bundles together (Figure 9).

b) To prevent possible binding between the cable and the strap and spacer during the cyclical expansion and contraction of the strand, install the strap and spacer at least 4 inches (10 cm) before the first bend in the drip loop. Failure to do so may result in damage to the cable sheath.

c) The straps and spacers used for drip loops and other fiber optic cable handling purposes should be hand-tight only. The strap and spacer must be loose enough to allow longitudinal travel by cable, but tight enough to prevent the strap and spacer from moving along the strand.

d) Hold drip loops and/or the drip loop forming tool in place until the lasher has been transferred and approximately 50 feet (15.24 m) of cable in the next span is lashed. This will help prevent distortion of the drip loop when this next span is lashed.

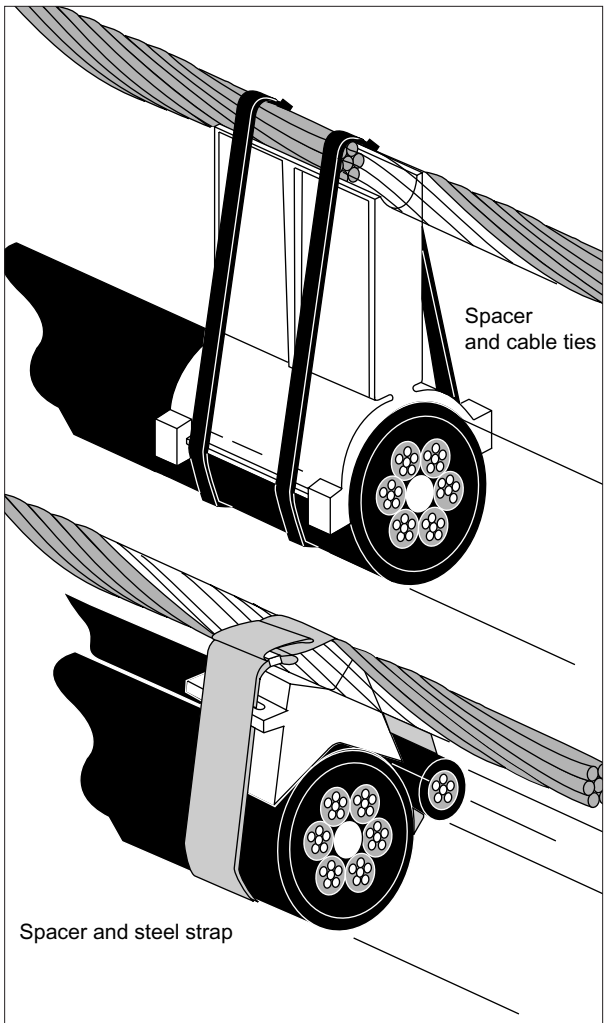

Figure 9 - Cable spacers and straps

4.19 Record the cable meter marks at approximately every other pole location and at each cable end on the construction prints for emergency restoration and maintenance purposes.

Lashers

4.20 A lasher is used to secure fiber optic cable to a strand by wrapping a small continuous lashing wire around both the strand and the cable in a spiral manner (Figure 10). Lashing "wire" may be made of steel or contain dielectric materials such as aramid yarn. Fiber optic cables must be installed without loose lashing, twisting, or weaving along the strand. Rippling, kinking, or any kind of deformation of the cable can require replacement of the cable by the responsible contractor.

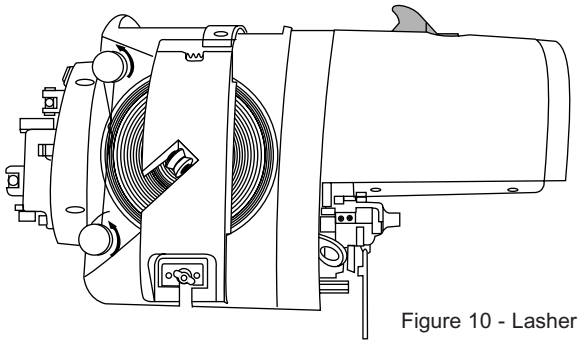
Figure 10 - Lasher

4.21 When lashing fiber optic cable to the support strand, there must be at least one wrap of lashing wire per linear foot. To determine the correct size of standard lashing wire for the cable and the strand, consult the lasher instruction manual.

4.22 The lasher used must be of sufficient size to lash the cable bundle without damaging any of the cables. If a lasher is used on a cable bundle that is slightly oversized, the lasher will put periodic dents in the cable. The largest standard Corning Cable Systems cable currently has an outside diameter of 1 inch (25 mm). A standard "C" type lasher is therefore recommended when lashing one Corning Cable Systems fiber optic cable to a strand. Table 4 lists commonly used lashers and the corresponding bundle sizes they are designed to handle.

Lasher type	Maximum Cable Bundle Diameter	
S	1 inch	(25.40 mm)
H	1 1/2 in.	(38.09 mm)
C	1 5/8 in.	(41.01 mm)
D	3 1/4 in.	(82.50 mm)

Table 4 Lasher capacities

CAUTION: *Lashers are complex mechanical devices.They should be handled with care and kept clean. Lashers should be raised and lowered to and from strand level with a hand-line attached to the handle only. Observe caution when transferring a lasher from one side of a pole to another.*

4.23 Corning Cable Systems fiber optic cable can be lashed to a messenger wire with one or two lashing wires. Double lashing provides an added measure of security against vibration and other stresses. Corning Cable Systems recommends double lashing fiber optic cable in the following situations:

- When overlashing over existing aerial cables.
- When placing cable over railroads and roadways.

4.24 Corning Cable Systems recommends that a "shotgun" arm (cable block pusher) be used between the lasher and the cable guide chute when lashing aerial cable (Figure 11). As illustrated in the respective installation procedures, a shotgun mounted in front of the lasher serves as a spacer for the cable guide (and multi-cable positioners, if required) during drive-off installations; in back-pull installations the arm pushes cable blocks located mid-span to the next pole for removal as the cable is being lashed. If a “shotgun” arm cannot be placed on the strand, maintain the chute/positioner-to-lasher spacing by means of the pull-lines attached to the lasher and positioner or gable guide chute.

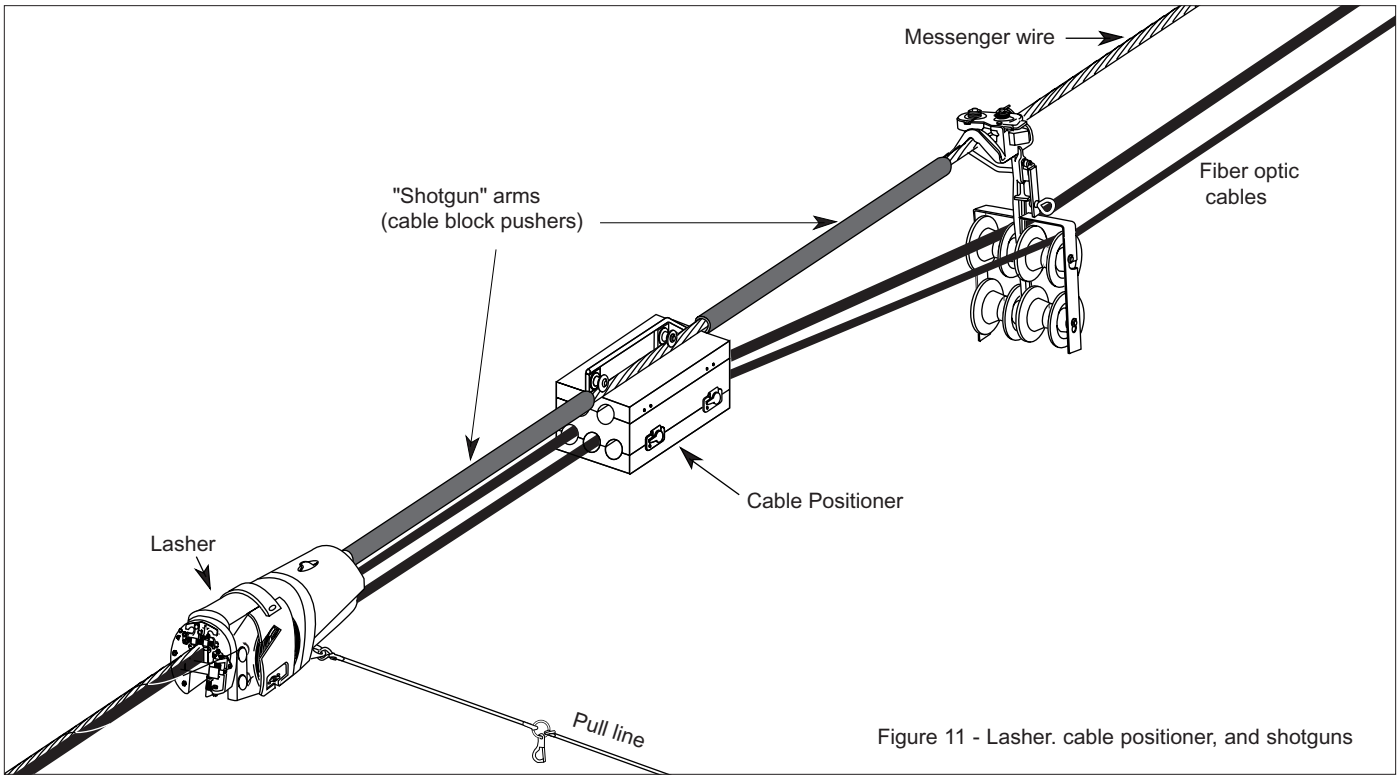

Figure 11 - Lasher. cable positioner, and shotguns

Lasher Operation

4.25 Read and be thoroughly familiar with the manufacturer's instructions for the lashing machine you are using. Install the lashing wire and make any needed adjustments as directed in the lasher instruction manual. If double lashing is required, load lashing wire into both sides of the lasher.

4.26 If more than one cable is being lashed, install the cable positioners and pushers on the strand in their proper sequence. Install the cable positioners so that their hinges and knobs are facing you on the pole or the aerial lift (see Figure 11).

4.27 Secure the lasher and cable to the strand as follows:

a) With the rollers, lifter, and gates open, place the lasher on the strand and lock the tensioning roller.

b) Lift the cable into the lasher and adjust the rear cable lifter so that the cable is within 0.25 inches (6 cm) of the strand.

c) Adjust the vertical cable rollers to almost contact the cable. Do not overtighten this adjustment, as the cable could be damaged.

d) Feed the cable through the positioners (if present) and guides.

4.28 Corning Cable Systems recommends that as a cable run is lashed up, span-by-span, the lashing wire should be terminated at each pole with a lashing wire clamp (Figure 12). This practice will ensure that only one span of cable will be unsupported if a lashing wire is cut.

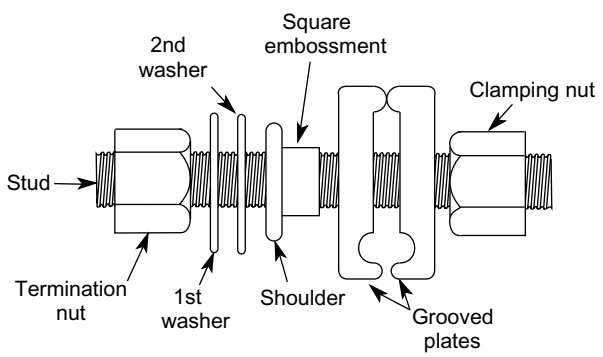

Figure 12 - Lashing wire clamp

4.29 Terminate lashing wires as follows:

a) Place a suitable cable spacer between the fiber optic cable and strand (consult and follow your company's practices on spacer selection and installation).

b) Locate the lashing wire clamp 5 cm (2 in) from the strap and spacer. Pull enough lashing wire out of the lasher for termination into the lashing wire clamp.

c) Wrap the lashing wire three times around only the strand between the lashing wire clamp and last wrap around both the strand and fiber optic cable. The lashing wire should follow the spiral of the strand wires.

Note: *The three wraps around the strand are necessary to reduce horizontal stress caused by friction between the lashing wire and the strand. The wraps also prevent kinking in the cable and broken lashing wires which result when the lashing wire termination is made without strand wraps.*

d) Secure the wire in the clamp as shown and described in Figure 13.

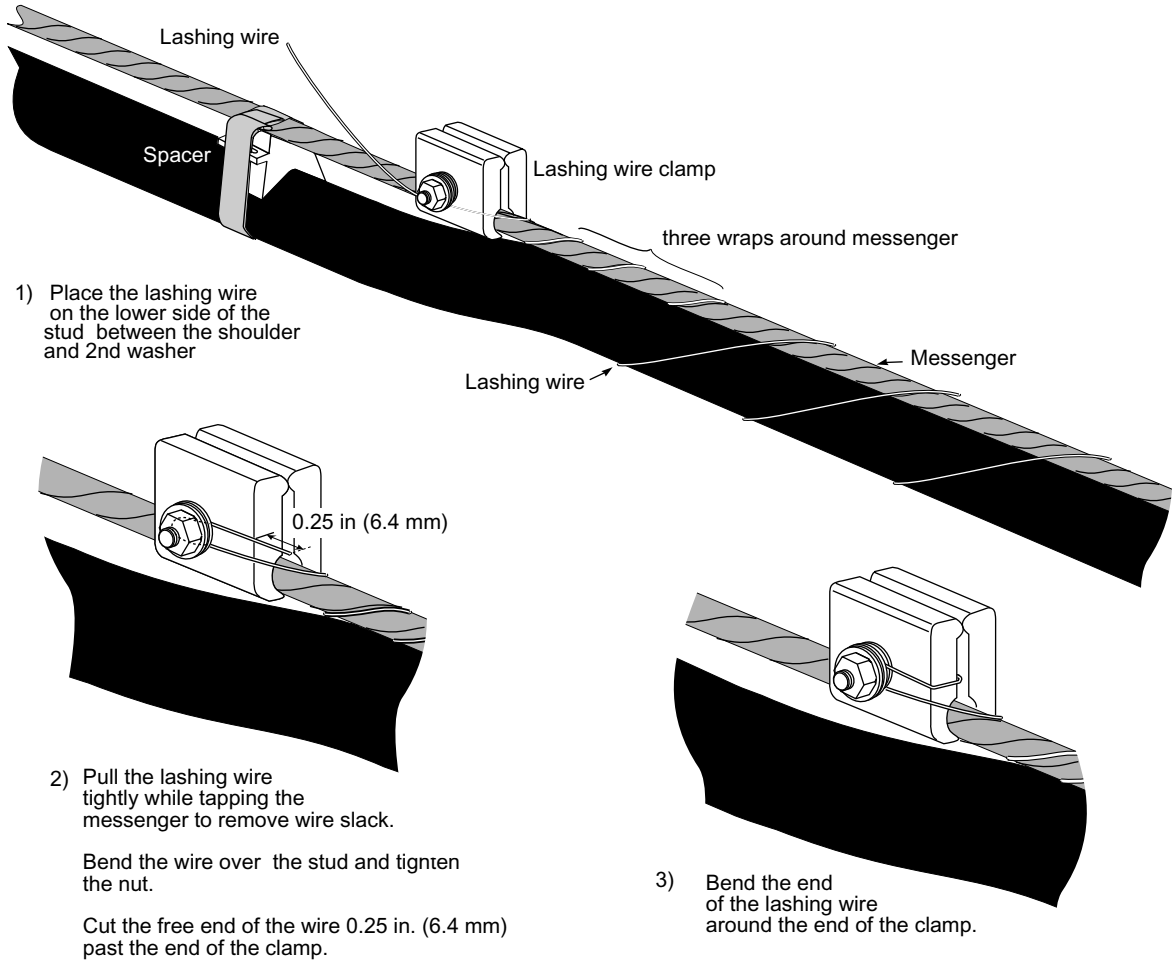

Figure 13 - Lashing wire termination

Transferring Lashers Around Poles

4.30 The lasher and its accessories must be manually transferred each time they reach a pole along the route. Use caution during transfers to prevent possible damage to equipment and injuries to ground personnel which could result from dropped equipment.

4.31 Before transferring the lasher or releasing the lasher brake, temporarily clamp the lashing wire to the strand with a catch-off clamp. Take care to avoid overtightening the catch-off clamp to prevent possible lashing wire failure. Light pressure is all that is required to hold the lashing wire. After the lashing wire is secured, pull enough lashing wire out of the lasher for termination and make the appropriate cut.

4.32 If the system design calls for splices on a particular pole, leave the appropriate amount of slack as described in step 4.38. If no splices are required, a drip loop may be installed on the pole before the lashing process continues. Install the required straps, spacers, and cable guards; finally, check all work.

4.33 Provide a safety catch to prevent cable guides and other equipment from being dropped during a transfer by detaching the pulling line, feeding it over the next span, and reattaching it to the equipment. With a lasher, one end of the lasher bridle can be unsnapped and wrapped around the next section of strand before reattaching it to the lasher (Figure 14).

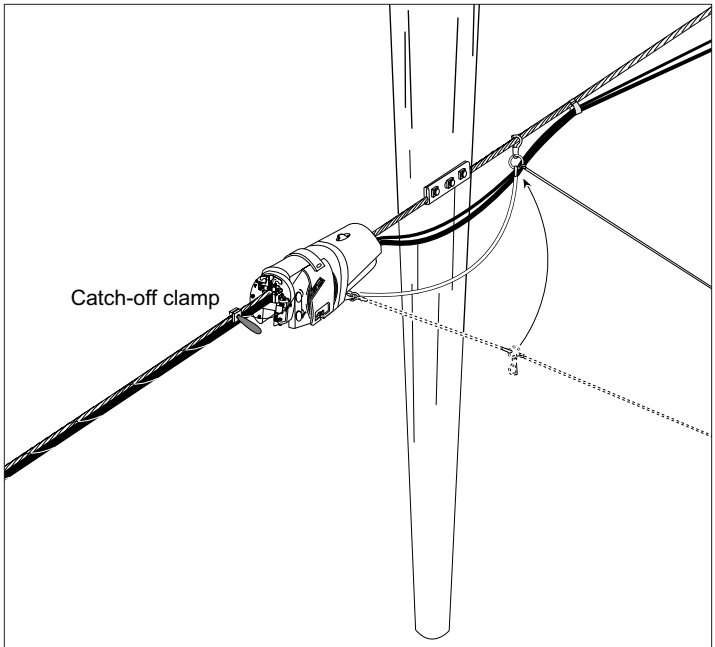

Figure 14 - Transferring a lasher around a pole

4.34 Transfer the lasher to the other side of the pole. Ready the next span for lashing as follows:

a) Position the lashers, pushers, and positioner.

b) Reattach the bridle in the pull position.

c) Reinstall the cables in the lasher.

d) Remove the catch-off clamp.

e) Terminate the lashing wire by wrapping it three (3) times around the strand only and then attaching it to the lashing wire clamp.

Deadends and Crossovers

4.35 As with copper cables, fiber optic cables should be routed on the inside of messenger intersections at aerial crossovers and deadends (Figure 15). This practice, along with drip loops, will minimize the chance of damage should a pole in the cable route be damaged. Be sure to respect the cable's minimum bend radius whenever the span makes a directional change.

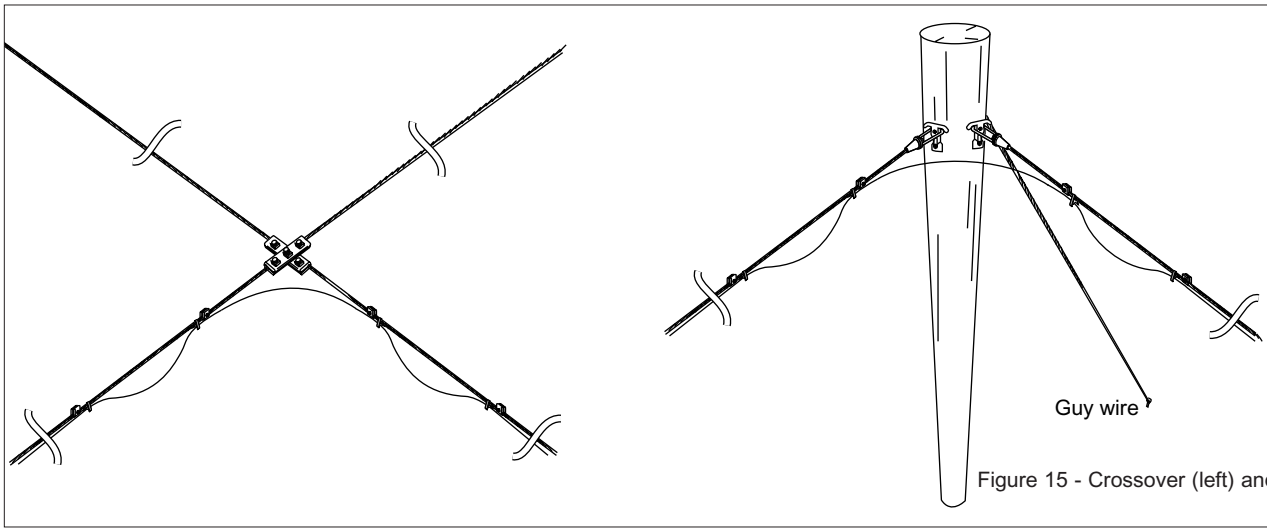

Figure 15 - Crossover (left) and deadend

Splicing and Slack Storage

4.36 Corning Cable Systems recommends that cable splices use a "butt type" configuration; i.e., both cables enter the same end of a closure, for ease of storing (Figure 16).

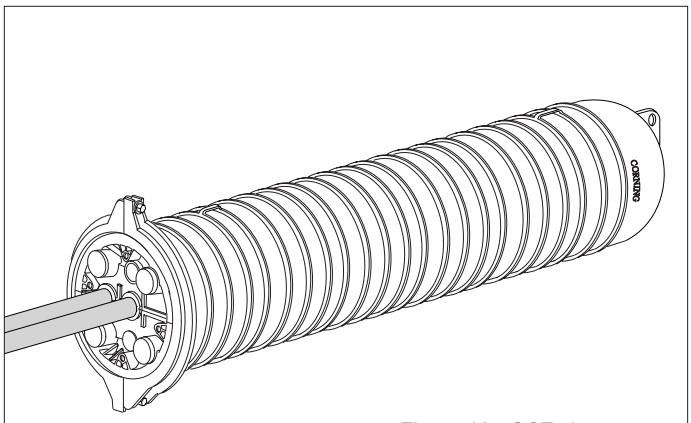

Figure 16 - SCF closure

4.37 Corning Cable Systems recommends that slack-cable loops be placed at least 4 feet (1.4 meters) from poles unless they are protected by a cable enclosure which is mounted on the pole (if allowable). Cable enclosures may be desirable in harsh environments.

4.38 Figure 17 illustrates an installed splice closure and three storage options:

a) Lash the closure and slack to the messenger. Place the slack loop as far away as possible from the pole. DO NOT COIL THE CABLE ON THE POLE. DO NOT EXCEED THE RECOMMENDED BEND RADII IN THE SLACK LOOP (Figure 17a).

Note: *Different sizes of "snowshoes" are available and can be used to store the slack loop or to create a loop back. Select the appropriate size which will not violate the minimum bend radius requirements of the cable.*

b) Mount the closure either on the pole or strand with the slack placed inside an enclosure (Figure 17b).

c) Place a small closure inside an enclosure along with the cable slack (Figure 17c). Do not exceed the cables' minimum bend radii.

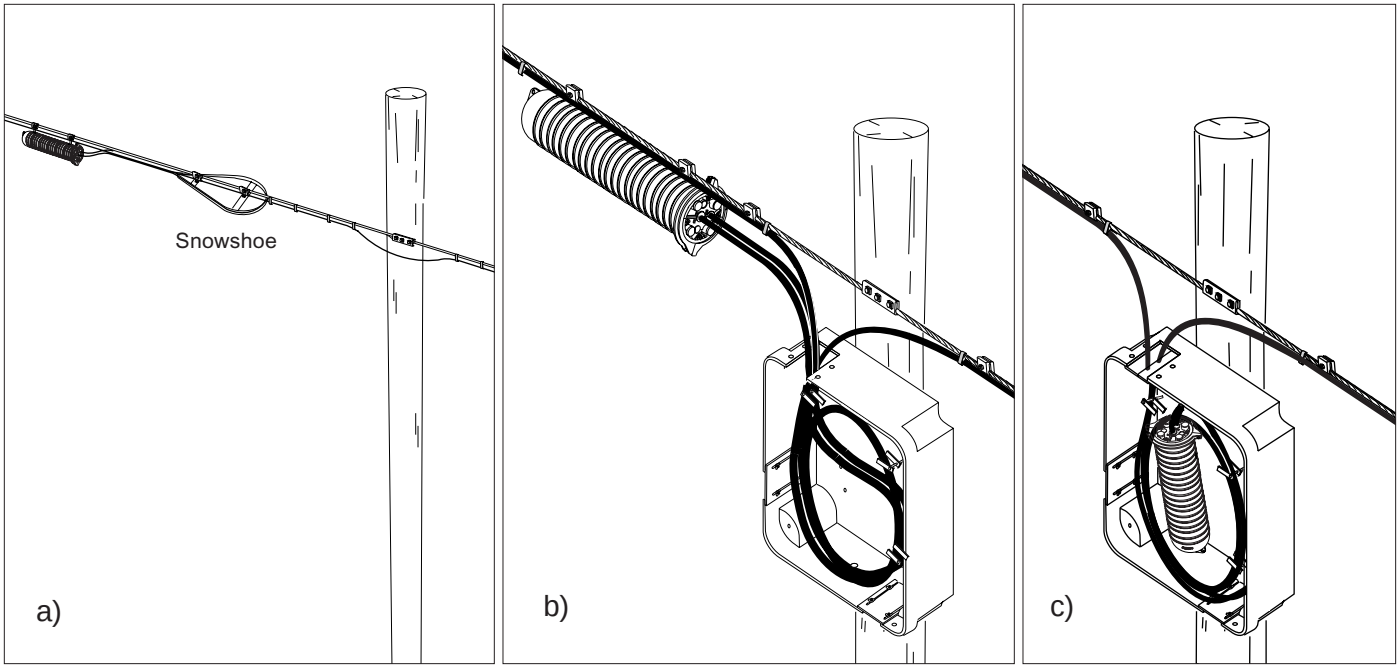

Figure 17 - Slack loops and splice closures

4.39 Corning Cable Systems recommends that splicing be done on the ground, not in an aerial bucket. Consequently, it is necessary to allow enough slack at each splice point to bring both cables to the ground and into a convenient work area, plus 16 feet (5 meters).

4.40 The splicing work area, which may be a van, custom trailer, or tent, should be relatively dust-free and stable, as dust and movement can slow splicing and in some cases adversely affect splicing equipment.

Packaging Removal

4.41 Upon arrival at the job site, remove the packaging from each cable reel (Figure 18). If the cable date sheet for the reel has been retrieved on-line from Corning Cable Systems, record the actual reel location in the aerial plant on the sheet to further document the system.

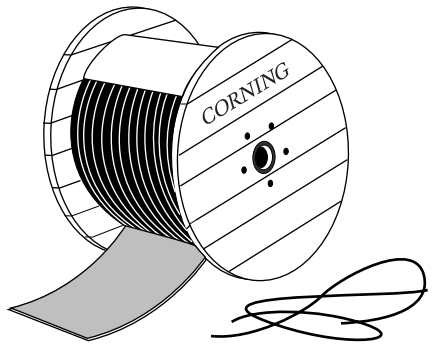

Figure 18 - Reel packaging removal

Storing Partial Cable Reels

4.42 Excess cable remaining from an aerial installation is of value for future installations or emergency restorations. Store partial reels of cable as follows:

a) Pull all loose cable off the reel and re-reel the slack. Make sure that the wraps do not cross each other. Cap and seal all cable ends.

b) Securely fasten the cable end to the inside flange of the reel with a staple. This will prevent cable movement during transport.

c) Reels should be stored on edge and end-to-end in rows. Make sure that reels rest edge-to-edge with reels in adjacent rows to prevent damage to cables (Figure 19).

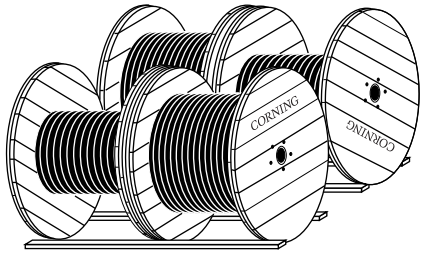

Figure 19 - Reel storage

d) If the cable is stored outdoors, cover the reels for weather protection and make sure the storage area is free from rocks and debris which could cause damage during later moves.

5. Installation Methods- Equipment Requirements

NOTE: *These procedures assume that the strand has already been installed and properly tensioned according to your company's practices.*

5.1 The method chosen for placing lashed aerial fiber optic cable will depend on several variables:

- Pole line accessibility
- Equipment and manpower resources
- Length of cable run

5.2 Table 5 provides a comparison of the tools and equipment required for the moving reel method and two types of stationary reel cable placement. Additional equipment requirements are referenced under the respective instructions.

Equipment Description	Moving Reel	Stationary Reel (winch pulled)	Stationary Reel (hand pulled)
Aerial lift (bucket truck)	X (1)	X	X
Reel trailer	X (2)	X	X
Ladders	X	X	X
Lasher	X	X	X
Lasher pull rope	X	X	X
“Shotgun” arm	X	X	X
Lashing wire clamps	X	X	X
Cable chute guide	X	X	X
Cable Blocks	-	X (3)	X (3)
Cable Block Lifter	-	X	X
Cable Lifter	-	X	X
Pulling Grip	-	X	X
Corner blocks and Brackets	-	X	X
Cable puller	-	X	X
Hand-line	X	X	X
Pruning sticks	-	X	X
Winch and Line	-	X	X
Winch line blocks	-	X	X
Dynamometer	-	X	Optional

1 Not required if the aerial lift has adequate reel-carrying capacity.
2 Ladders not required if two lifts are available.
3 50-foot (15 meters) maximum spacing, additional black required when crossing streets, other utilities, etc.

Table 5 - Aerial placement equipment requirements

5.3 The installation technique and/or equipment used will determine the manner in which cable reels will be mounted on cable reel trailers or vehicles. Generally:

- For drive-off installations: place reels so that the cable end can be pulled from the top of the reel towards the rear of the trailer or vehicle.
- For back-pull installations: place reels so that the cable end can be pulled from the top of the reel toward the front (tongue) of the trailer.

5.4 Before beginning any installation, follow all of your company's safety procedures to ensure that proper barricades, warning signs, etc., are in place.

6. Moving Reel (Drive-Off) Method

6.1 In the moving reel or drive-off installation method, the cable is payed off its reel, raised to strand level, and lashed to the strand as the placement vehicle(s) move (s) along each span. This method requires vehicle access to the placement side of the pole line, and the cable route must be away from tree limbs, guy wires, and other obstructions. If the cable route has significant elevation changes, it is preferable to lash downhill.

6.2 The moving reel method offers production and cost advantages over stationary reel methods as no cable blocks or other temporary support hardware are required. In addition, fewer crew members on the ground with two-way communications devices (e.g., radios) are required.

6.3 Begin the installation by unreeling an adequate, undamaged cable tail. This tail should be long enough to reach from strand level to a splicing vehicle on the ground, plus 16 feet (5 meters) left at the pole.

In addition, unreel enough slack to assure that the cable's minimum bend radius is not exceeded when the cable is raised to strand level.

Generally, the reel-carrying vehicle should be 50 feet (15 meters) ahead of the lasher to assure a proper cable minimum bend radius between the reel and strand level (Figure 20).

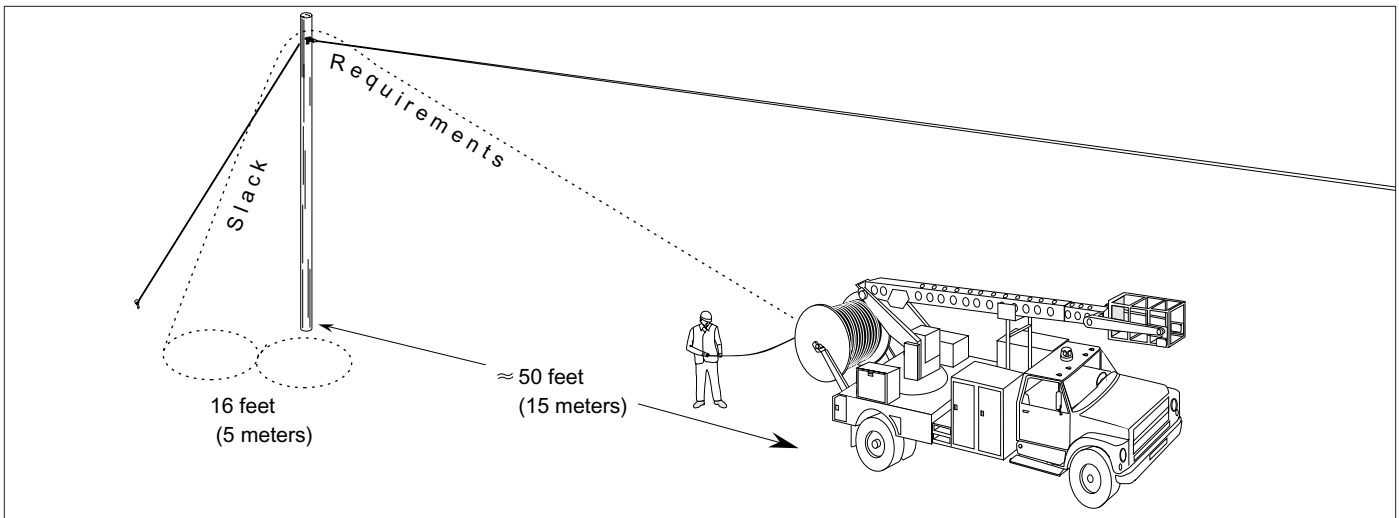

Figure 20 - Moving reel method slack requirements

6.4 Position the aerial lift bucket so that the crew member riding in it has a 4-foot (1.2 meters) working range on either side of the lasher.

Note: *This procedure assumes that aerial lifts (bucket trucks) are available for the installation. If such vehicles are not available, the cable, lasher, and all required strand equipment must be raised to strand level with hand-lines by a craftsman on a ladder or on each pole.*

6.5 Attach a lashing wire clamp to the strand 16 inches (40 cm) from the centerline of the pole (or the distance necessary in order to maintain the desired bend radius of the cable in the slack-span or strand-to-pole transition).

6.6 Place the lasher, a four-foot long “shotgun” arm, and a cable guide (Figure 21) on the strand as described in step 4.27. Ready the lasher by pulling enough lash wire out of the lasher to terminate in the lashing wire clamp as described in step 4.29.

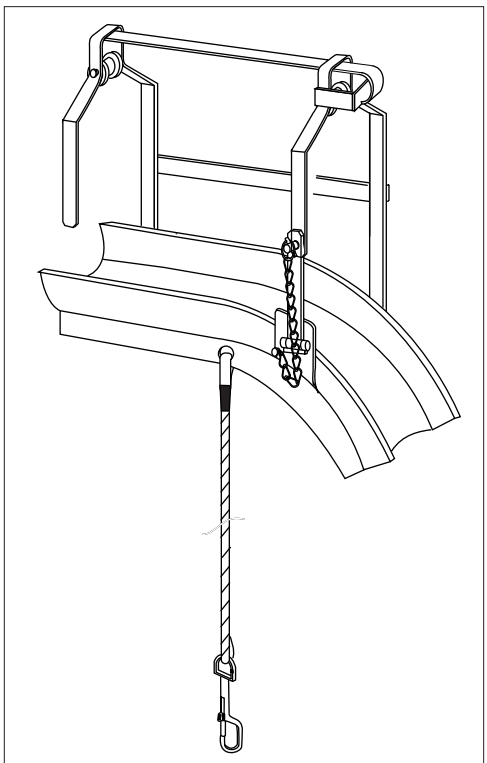

Figure 21 - Cable guide

6.7 Using an aerial lift, raise the cable to strand level and place it in the cable guide. Make sure that the cable moves freely and without stress as it leaves the ground. Do not allow the cable to exceed its minimum bend radius during this step (Figure 22).

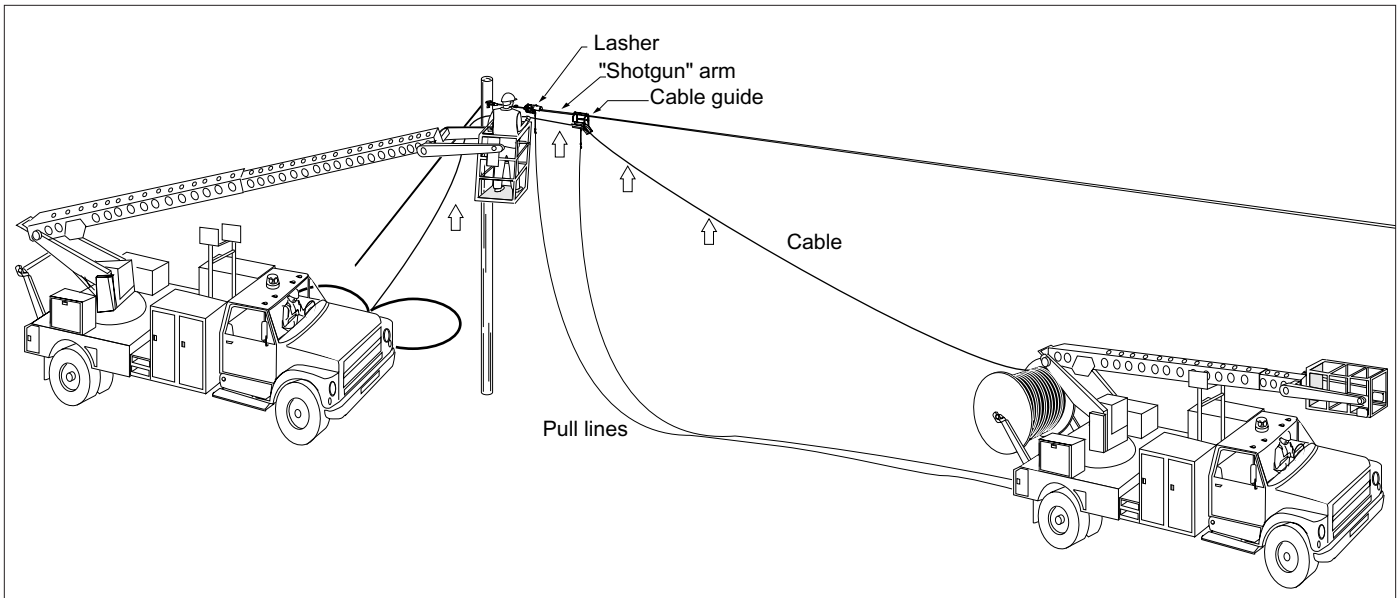

Figure 22 - Raising cable to a strand with a lift

Note: *If you are not using a lift, pass a line through the cable chute guide and pull the cable up to the guide (Figure 23). Do not place stress on the cable and make sure that the cable's minimum bend radius is not exceeded.*

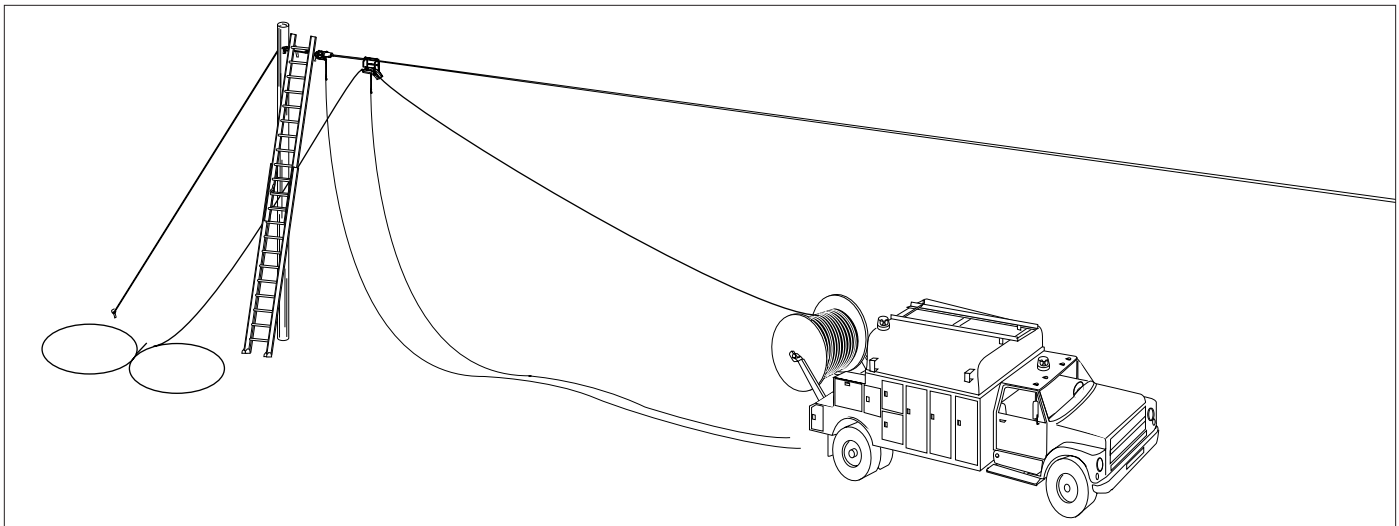

Figure 23 - Raising cable to a strand with a ladder and lines

6.8 Verify that sufficient slack for splicing is available before securing the cable to the strand. Position the cable under the strand with a strap and spacer mounted 14 inches (35 cm) from the pole center line (or 2 inches (5 cm)) inboard of the lashing wire clamp location. As a temporary measure, the cable may be further secured to the strand with several wraps of friction tape.

6.9 Position the cable in the guide, positioners (if present), and lasher. Adjust the lasher as described in steps 4.27 a - c and the instruction manual provided with the lasher. The lashing wire should be placed around the lasher's tension rollers and terminated in the lashing wire clamp.

6.10 Attach separate pulling lines to the lasher and the cable guide (and any accessories such as positioners).

Note: *Corning Cable Systems recommends that the lasher be constantly observed so that the lasher can be stopped if the cable binds in the lasher. Depending upon the equipment available, such control may be assured by:*

a) Pulling the lasher and its accessories by hand behind the reel-carrying vehicle with good communications between the crewman and the vehicle driver or,

b) Tying the pulling lines directly to the vehicle (do NOT attach any lines to the lift's bucket or boom) with the observer stationed on the rear of the vehicle.

6.11 As the placement begins:

a) Hold the cable end in place at the pole to prevent any movement along the strand until the lasher operation has progressed 50 feet (15 meters) down the strand (Figure 24).

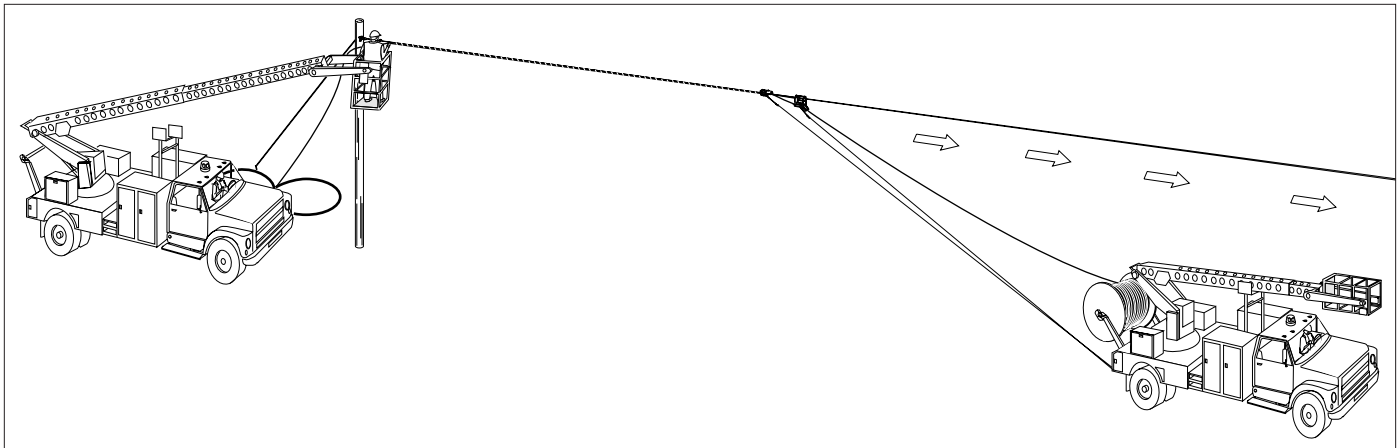

Figure 24 - Moving reel installation

b) Pull the lasher and its accessories with a constant tension to prevent the lashing wire from wrapping the fiber optic cable around the strand.

c) Cable payoff must be surge-free and allow the cable to smoothly enter the cable guide at strand level. Control reel rotation to prevent:

1) Free running, which could result in cable coming in contact with the ground.

2) Too-slow a payoff, which might subject the cable to excessive tension.

6.12 The reel-carrying vehicle must maintain its 50 foot distance ahead of the lasher, and drive as close to the pole line as conditions permit during the placement. Vehicle speed must assure complete control of the lashing operation. *The speed used in the moving reel method of fiber optic placement can average up to 150 feet (45 meters) per minute, which is equivalent to a vehicle speed of 1.7 miles per hour.*

6.13 Should it be necessary to stop the lashing operation mid-span, the crew member controlling the lasher must make sure that proper tension and bend radius are maintained on the cable.

6.14 Upon reaching each pole along the route, stop the vehicle to transfer the lasher and its accessories around the pole. If a crew member has been stationed on the pole to preform this task, he or she should remain on the side of the pole away from the strand until the lashing operation has stopped.

6.15 At each pole:

a) Temporarily clamp the lashing wire to the strand.

b) Transfer the guide, shotgun, and lasher to the other side of the pole as described in Section 4.

c) If required, form a drip loop on the cable, attaching straps and spacers on both sides of the pole. Manually hold the drip loop in place until the lasher has moved 50 feet (15 m) down the span.

d) Make permanent lashing wire terminations on the strand before moving to the next pole.

6.16 Continue the drive-off installation, span-by-span, from the start-up point towards the end of the cable until the entire run is completely lashed.

6.17 At the end of the run, verify the slack-span and splicing requirements with the installation supervisor. Depending on the system plan, either leave the reel at this site or unreel adequate cable slack before cutting and capping the cable.

7. Stationary Reel (Back-pull) Method

7.1 In a stationary reel or "back-pull" installation, the cable is placed via at least two distinct operations (Figure 25):

1) The cable is pulled into place beneath the strand, suspended there by cable blocks.

2) Lashing then begins at the far-end of the cable run, the lasher pulled back down the cable route towards the fixed-location cable reel.

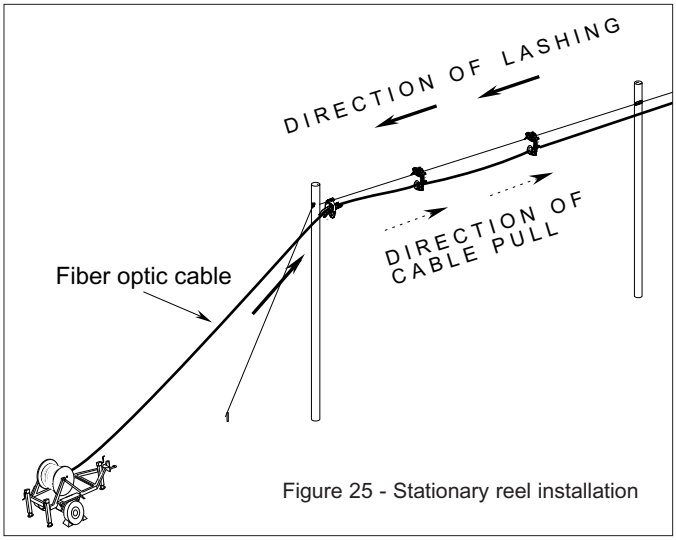

Figure 25 - Stationary reel installation

7.2 There are a number of variations possible in the stationary reel placement method. Factors which affect the placement procedure include:

a) length of the cable run

b) the number of cables being placed

c) use of an unoccupied strand or overlashing

d) the difficulty of the run (number of heavy corners, elevation changes, etc.)

e) manpower and equipment resources available.

7.3 This procedure outlines the steps common to all stationary reel installations, as well as variations of hand-pulled and winch-assisted stationary reel cable placement.

Cable Reel Placement

7.4 Cable reel location can affect both the safety and efficiency of placement operations. Consider the following factors when determining cable reel locations.

- System Design: Set up cable reels at end or splice points so that complete runs can be pulled into place without splicing. Set-up time is reduced if you can run cable in both directions from a splice point.
- Traffic Impact: Select sites which have the least possible impact on vehicle and pedestrian traffic. Plan for adequate barricades, signs, and safety equipment to protect the work area.
- Work Area Requirements: Cable reel sites require more than 50 feet (15 meters) of working area between the cable reel and first pole in the run. In addition, the cable reel support bar of the trailer or reel carrying vehicle must be level to minimize contact between the cable and reel flanges and ensure smooth cable payoff.

  Be prepared to level the reel by means of planks or other supports under the vehicle or leveling the ground in unpaved areas. Line up the center of the cable reel with the strand as closely as possible.

7.5 Cable reel trailers should be disconnected from their tow vehicles before beginning an installation. Level the reel, and make sure that the wheels of the reel-carrying vehicle (trailer or truck) are securely chocked (Figure 26).

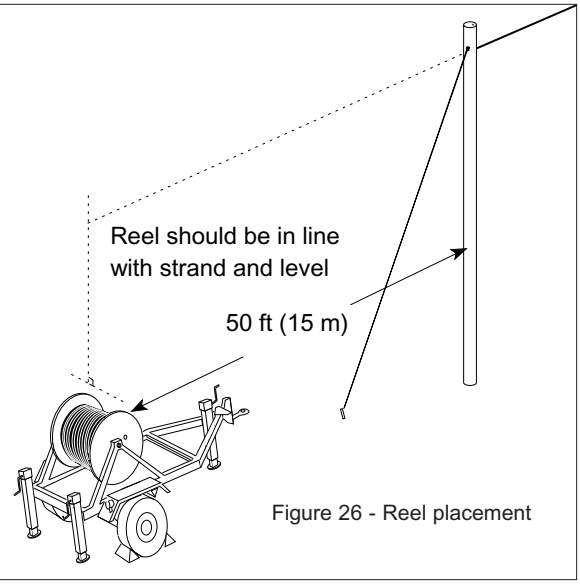

Figure 26 - Reel placement

7.6 To guide the cable from its reel to its proper place under the strand, install a set-up bracket on the strand on the pole side opposite the cable reel.

For single cables, a cable guide chute can be attached to the bracket; for multiple cables, horizontally attach a 45 degree corner block to serve as a guide block (Figure 27). The set-up bracket's swiveling features will accommodate cable de-reeled from off center-line of the strand.

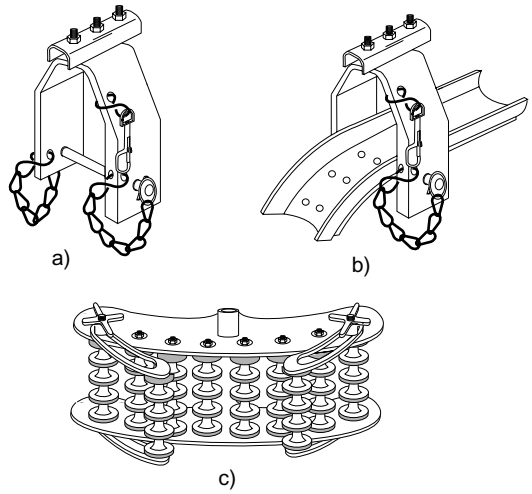

Figure 27 - a) Set-up bracket, b) bracket with cable guide, c) corner block

7.7 If not factory-installed, attach a pulling grip and breakaway swivel to the end of each cable to be installed.

Cable Pullers

7.8 Cable pullers are devices which ride either directly on a bare strand or over existing lashed cables. Available in single and multiple cable configurations, cable pullers link the pull-line to the pulling grip eye of a cable:

Brake-equipped cable pullers (Figure 28), which are used on unoccupied strands, lock onto the strand when the pull is stopped as cable tension exceeds pull tension.

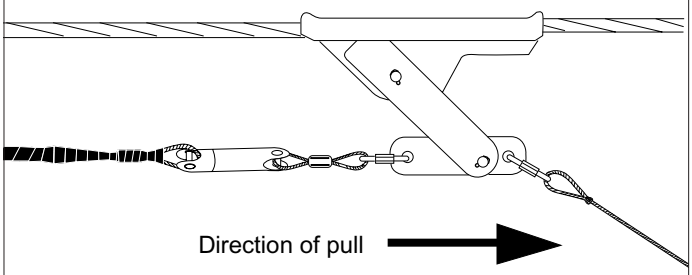

Figure 28 - Brake-equipped cable puller

Cable pullers suitable for overlashing (Figure 29) rely on large rollers and are not brake-equipped. Either type of puller should be used with a transfer harness to maintain cable tension while the puller is transferred around a pole.

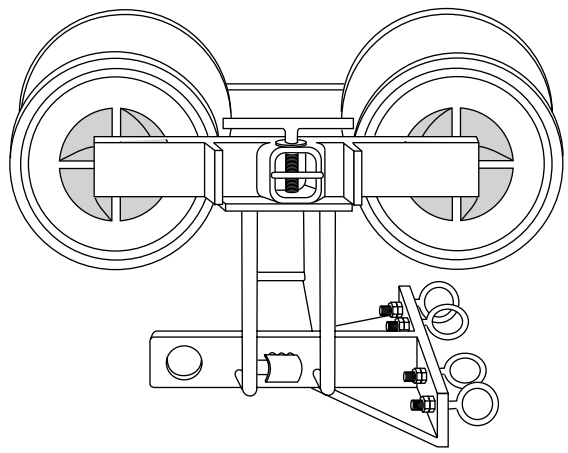

Figure 29 - Cable puller

Strand Preparation

Cable Blocks

7.9 Cable blocks secured to the strand serve as temporary suspension supports for cable and winch-lines during stationary reel installations. Cable blocks range from 1 to 4 pounds (0.45 to 1.8 kg) in weight, accommodate single or multiple cables, and vary in operating features. Familiarize yourself with the type and operation of the cable blocks to be used in your installation before going to the job site.

7.10 Designed for general strand use, the cable blocks illustrated in this procedure are equipped with a cam-actuated, reversible locking mechanism (Figure 30).

Fixed in place while cable and/or pull-lines pass over their rollers, each lock is released when the back-pulled cable block pusher or the shotgun mounted in front of the lasher makes contact with the cable block. The cable block is then free to be pushed along the strand to the next pole or lifted from the strand if necessary.

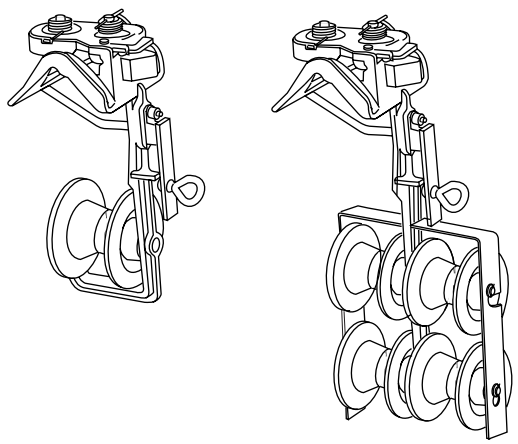

Figure 30 - Cable blocks

7.11 Cable blocks are positioned and secured in place on the strand with a cable block lifter mounted on a pruning (lift-up) stick (Figure 31).

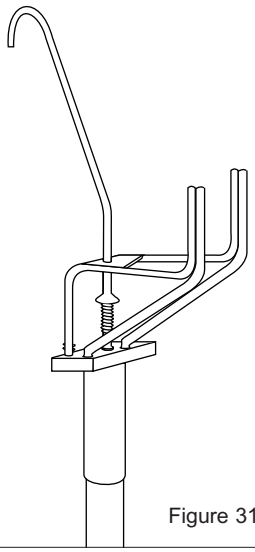

Figure 31 - Cable block lifter

7.12 All cable blocks must have the same orientation on the strand and have their locking levers (if present) set to release upon contact with the lashing equipment. Failure to do so will cause time-consuming delays as the locks will have to be manually released.

CAUTION: *To reduce the chance of personal injury and/or damage to equipment, never stand directly beneath the strand when placing cable blocks. Stand several feet to the side of the strand to provide both better visibility of the block and increased safety should a block fall from strand level.*

7.13 Cable blocks should be spaced at a maximum intervals of 50 feet (15 meters) on the strand for fiber optic cable. If your company practice calls for smaller intervals, follow that practice. In the following special conditions, use the interval spacing indicated:

a) Over all roadways, use a maximum interval of 25 feet (7.5 meters).

b) Place an additional block(s)...

- over telephone drops.
- over all locations where a need is indicated or perceived by federal, state, local, or company regulations.
- if the minimum bend radius of the cable is exceeded by any block.

7.14 Insufficient cable blocks can result in excess sagging of the fiber optic cable, more difficult pulls, and greatly increased chances of damage to the cable. Make sure that you have an adequate number of cable blocks before beginning the installation.

7.15 Heavy corners can cause the cable to jump out of a normal cable block, as well as place loads which exceed the block's plastic or rubber roller specifications. At such locations, use a one-sheave pulling block to prevent the cable from riding out of the block (Figure 32).

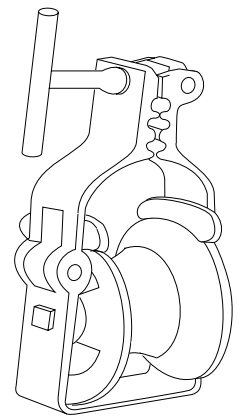

Figure 32 - One-sheave cable block

7.16 The timing of cable block placement depends on the equipment used in the installation:

a) If a cable puller is used to 1) hand-pull the cable or 2) pull the pull/winch-line into position for a winch-assisted installation, place the blocks individually on the strand as the puller passes.

b) If a winch-line or pulling rope / tape is going to be pulled the length of the run and then lifted to strand level, place all the blocks in advance.

Corner Blocks

7.17 Corner blocks are used when pulling cable through outside or inside corners. Available for both 45° and 90° turns, corner blocks reduce pulling friction, guide the cable, and maintain the bend radius of the cable as it rounds corners. Corner blocks (Figure 33 a) can be installed on poles using pole brackets (b) or at strand crossovers using crossover brackets (c).

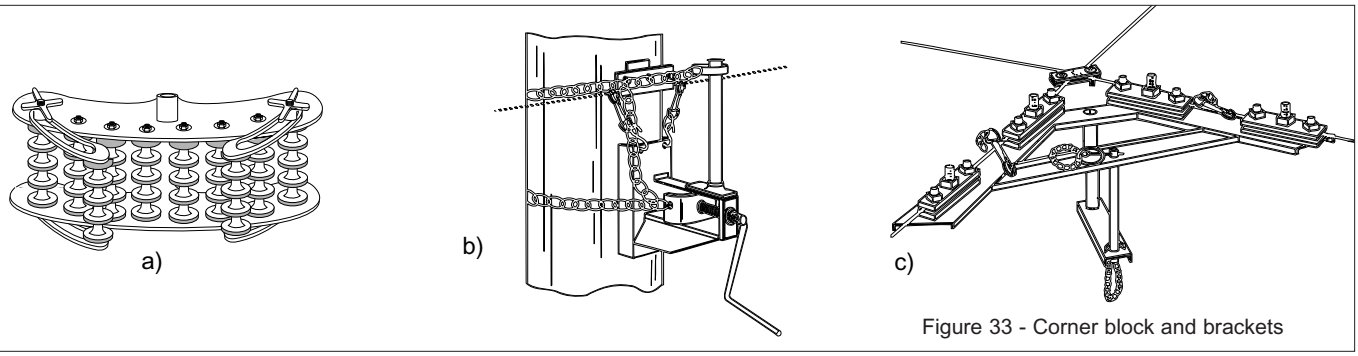

Figure 33 - Corner block and brackets

Back-Pulling by Hand

7.18 If installing the initial cable(s) on a strand:

a) Place a cable puller with pulling line on the strand.

b) Feed a handline through the cable chute down to the pulling eye attached to the cable.

c) Begin unreeling the cable as you lift it up to strand level and through the chute. Control the rotation of the cable reel to prevent free running of the cable.

d) Remove the handline and attach the pulling grip(s) to the cable puller.

7.19 Pull the cable puller along the strand, applying enough braking action on the puller to prevent the cable from winding around the strand. If the cable reel brake is set properly, the cable should move smoothly without excessive pulling force.

7.20 Continue pulling the cable until the cable end has gone approximately 25 to 30 feet (7.6 to 9 m) past the first cable block location. When you relax the pulling force, the cable puller's brake should lock onto the strand. Lift and secure a block onto the strand, and then use a cable lifter to place the cable onto the cable block's roller (Figure 34).

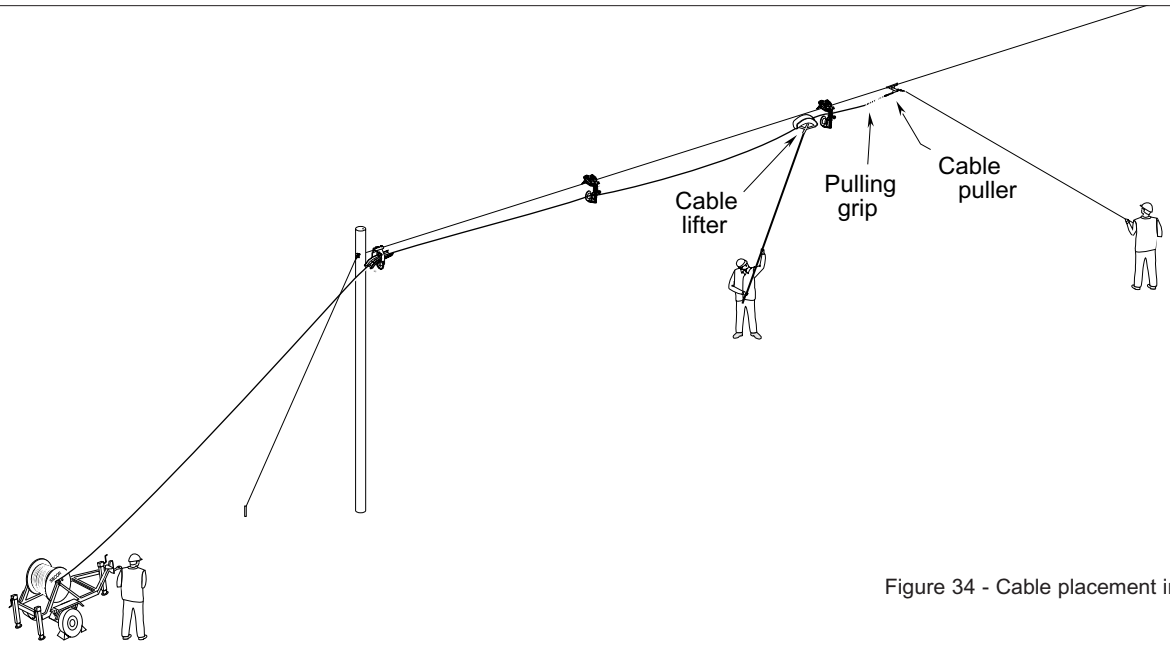

Figure 34 - Cable placement in a block

NOTE: *If the cable appears to oscillate excessively in the first span of the cable run, additional blocks secured at 20 foot (6 m) intervals can minimize oscillation during the pull.*

7.21 Continue the hand-pull, span-by-span pulling the cable along the strand and adding cable blocks for support.

Pause 30 feet (9 m) past each block location so that a crew member can place the next cable block on the strand. Make sure that the puller's brake maintains tension on the cable to prevent excessive sag in the fiber optic cable.

7.22 At each pole, a crew member must transfer the cable puller from one side of the pole to the other. As noted in step 7.8, the puller ideally should be equipped with a transfer harness which can maintain tension on the cable(s) while the puller is moved around the three-bolt clamp on the pole.

7.23 As the cable nears the end of the run, slow the pull. At the end of the cable run:

a) Install another cable chute to guide the cable down from the strand.

b) Route a handline through the chute to the pulling grip(s) to maintain cable tension.

c) Remove the cable puller from the strand.

d) Pull enough slack to take care of the slack-span and splicing needs. Temporarily secure the cable on the final pole and firmly brake the cable reel to maintain sufficient tension to prevent excessive sag along the run.

7.24 If pulling cable, the run should now be ready for lashing. Proceed to step 7.40. If the hand-pulling operation involved only pull-line placement, proceed to step 7.32.

Winch-assisted Pulls

7.25 Winches can be particularly useful in pulling long runs of fiber optic cable into place. A winch-assisted pull involves at least four steps:

a) Position the winch or power reel at the far end of the run.

b) Place a pull-line or winch-line in cable blocks the length of the run and attach the line to the reeled cable.

c) Pull the cable into place beneath the strand by retrieving the pull-line with the winch (Figure 35).

d) Pull the lasher back towards the cable reel.

Note: *Cable pullers may be used when using a winch to make single or multiple cable pulls. Cable puller use, however, requires an adequate number of crew members to remove and replace each cable block as the puller passes by on the strand. Further, the crew must stop the pull at each pole for cable puller transfer around the pole.*

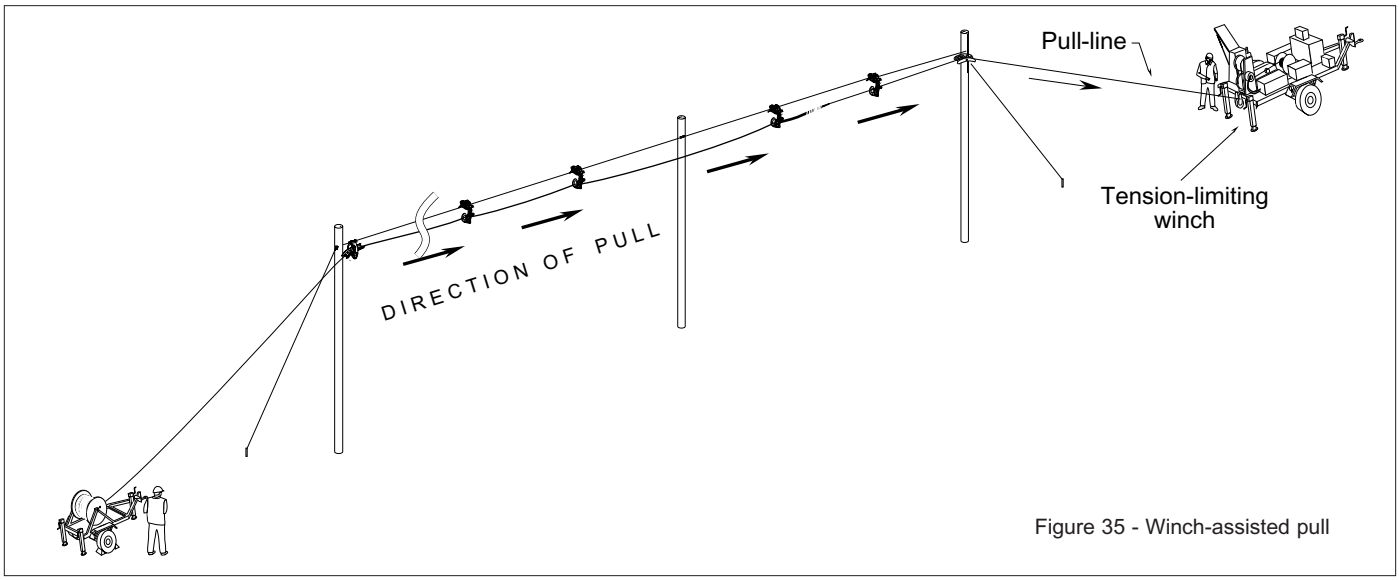

Figure 35 - Winch-assisted pull

7.26 If two or more fiber optic cables must be placed and lashed, it will be necessary to individually pull each cable into place using multiple blocks.

7.27 Generally, greatest production in single-cable, winch-assisted pulls is possible from carefully controlled pulls which do not use cable pullers. If blocks are properly placed and pulling tensions monitored, winch-assisted pull speeds may approach 150 feet (45 meters) per minute.

7.28 As with hand-pulled stationary reel installations, monitor the entire cable route during the cable pull. Station crew members equipped with two-way communications so that the entire run is under observation, making it possible to instantly stop the pull, if necessary. In addition, use a dynamometer to measure tension on all long cable pulls and short, difficult sections where pulling force might approach or violate the cable's specifications.

7.29 Begin the installation by placing the winch in line with the far end of the strand. Position the winch 50 feet (15 meters) from the final pole in the run to assure that the fiber optic cable's minimum bend radius is not exceeded when the cable end reaches the end of the cable run.

7.30 Prepare the cable route by placing cable blocks at all required points. Install steel winch-line blocks at all heavy corners and stress points (e.g., the top or bottom pole in a section with severe elevation changes) (Figure 36).

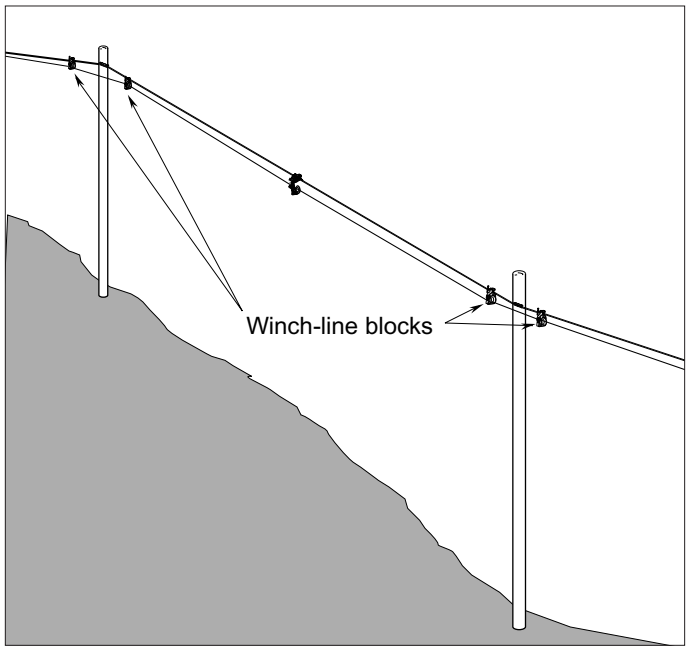

Figure 36 - Winch-line block use

7.31 Unreel and pull the winch or pull-line the length of the cable run to the cable reel. The pull-line may be:

a) pulled the length of the run on ground level and then lifted up to the cable blocks with a cable block lifter or wire raising tool.

or

b) hand-pulled into place with a cable puller on a bare strand.

The latter method is useful if the terrain or ground cover would make ground-level pulling difficult.

Note: *Various types of pull-lines have been success-fully used with fiber optic cable. Selection of a pull-line will depend on the length and condition of pull. Available pull-line materials include aramid yarn, wire rope, and polypropylene. For pulls using winches, materials with low stretch such as aramid yarn and wire rope can prevent cable surging. Pull-lines can have a round cross-section or be in a tape configuration. Consult your company's standard practices with regards to pull-line material.*

7.32 After the pull-line has been placed in all of the blocks, securely attach its free end to the eye of the cable's pulling grip. Use knots or other means appropriate to the pull-line being used.

This attachment point should not bind in the rollers, corner blocks, or cable blocks during the pull. Vinyl tape-wraps around the attachment point can help eliminate potential binding points.

7.33 Station personnel along the entire route and verify two-way communications between these observers and those manning the cable reel and winch.

7.34 Perform a final careful check of the cable reel. The inside flanges of the cable reel should be free from rough edges which might damage the cable.

7.35` Apply tension on the pull-line with the winch. The dynamometer should be in clear view of the winch operator. At the other end of the run, adjust the cable reel brake so that the pulling tension on the cable does not exceed the cables' maximum recommended limit.

7.36 Begin the pull slowly and gently. If no problems are observed along the route or indicated by the dynamometer, smoothly increase the pull speed to its maximum desired rate. The cable should flow smoothly and be free from oscillation. Maintain full control of the cable during the pull.

Note: *If the pull must be stopped suddenly, cable may "run out" of some of the cable blocks due to cable fed to the strand by the inertial rotation of the reel (Figure 37). Before resuming the pull, make sure that the cable is properly placed in all the blocks and that any excess slack in the run has been carefully taken up without kinking or twisting.*

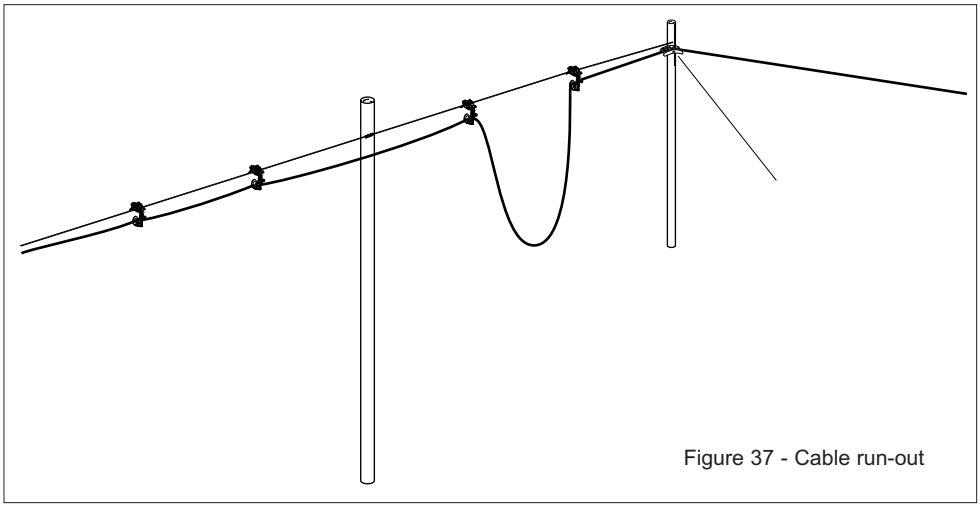

Figure 37 - Cable run-out

7.37 As the cable approaches the end of the pull, slow down the winch. Continue the pull until sufficient cable for the slack-span and splicing has been pulled down from strand level.

CAUTION: *DO NOT feed fiber optic cable onto the winch or power reel at the end of the pull. Failure to observe the cable's minimum bend radius can cause damage to the cable. Detach the pulling grip and the pull-line before the grip makes contact with the winch reel. If necessary, pull the required slack by hand.*

7.38 Stop the winch. Secure the cable at the last pole with a grip or several hitches in the pull rope until lashing begins. Lock the cable reel at the other end of the run to maintain tension on the cable.

7.39 Apply a protective cap to the cable end after removing the pulling grip. Make sure that all cable slack is properly coiled and protected from vandalism or theft if it will be left unattended during the lashing procedure.

Back-pull Lashing

7.40 During lashing, excess cable slack on the run is fed back towards the reel. Man the reel during lashing so that this slack can be taken up by the reel.

7.41 Prepare the run for lashing as follows:

a) Remove the cable chute from the strand.

b) Install the necessary straps and spacers at the pole.

c) Hold the cable in place during the first 50 feet (15 m) of lashing.

d) Mount the lasher, positioner (if lashing multiple cables), and cable block pushers on the strand as described in Section 4.

7.42 Begin the lashing process by having a crew member pull the lasher/pusher tow ropes along the path of the strand (Figure 38).

Pull the lasher with a down-ward pressure to keep the lasher mechanism spinning. Maintain tension on the lasher to prevent the lashing wire from wrapping the fiber optic cable around the messenger.

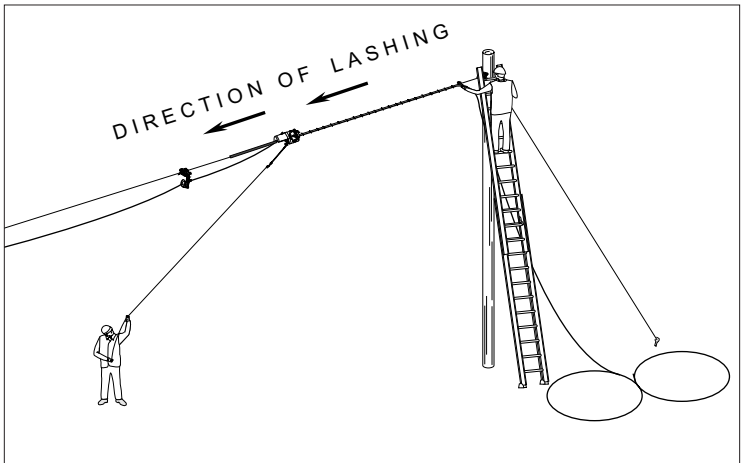

Figure 38 - Back-pull lashing

7.43 Pull the lasher the length of the span to the next pole, pushing the cable blocks before the lasher as it progresses down the span. At the next pole, remove the cable blocks which have accumulated and lower them to the ground with a line.

7.44 Before releasing the lasher brake, temporarily clamp the lashing wire to the strand with a catch-off clamp. After the lashing wire is secured, pull enough lashing wire out of the lasher for termination and make the appropriate cut. Transfer the lashing equipment to the other side of the pole.

7.45 If the system design calls for splices on a particular pole, leave the appropriate amount of slack. If no splices are required, straps, spacers, and a drip loop can be installed on the pole before the lashing process continues. Check all work at the pole before moving down the run.

7.46 Continue the lashing process, span-by-span, from the winch-end of the run back toward the cable reel until the entire run is lashed. The run should be completely lashed, properly sagged, and excess cable slack re-reeled at this time.

7.47 Consult the outside plant engineer or the system design plan before cutting the cable at the cable reel end. Make sure that adequate slack is provided for splicing, routing, or other needs. Cap the cable end after cutting it as described in step 2.20.

8. Combination Methods

8.1 If the cable route has terrain, trees, or other obstructions which prohibit the complete use of a moving reel installation, stationary reel methods can be used to pull in the cable in sections inaccessible to vehicles.

8.2 Set up cable reel at an end point of the route in which the moving reel method is practical. Install the vehicle-inaccessible spans using a stationary reel method (Figure 39).

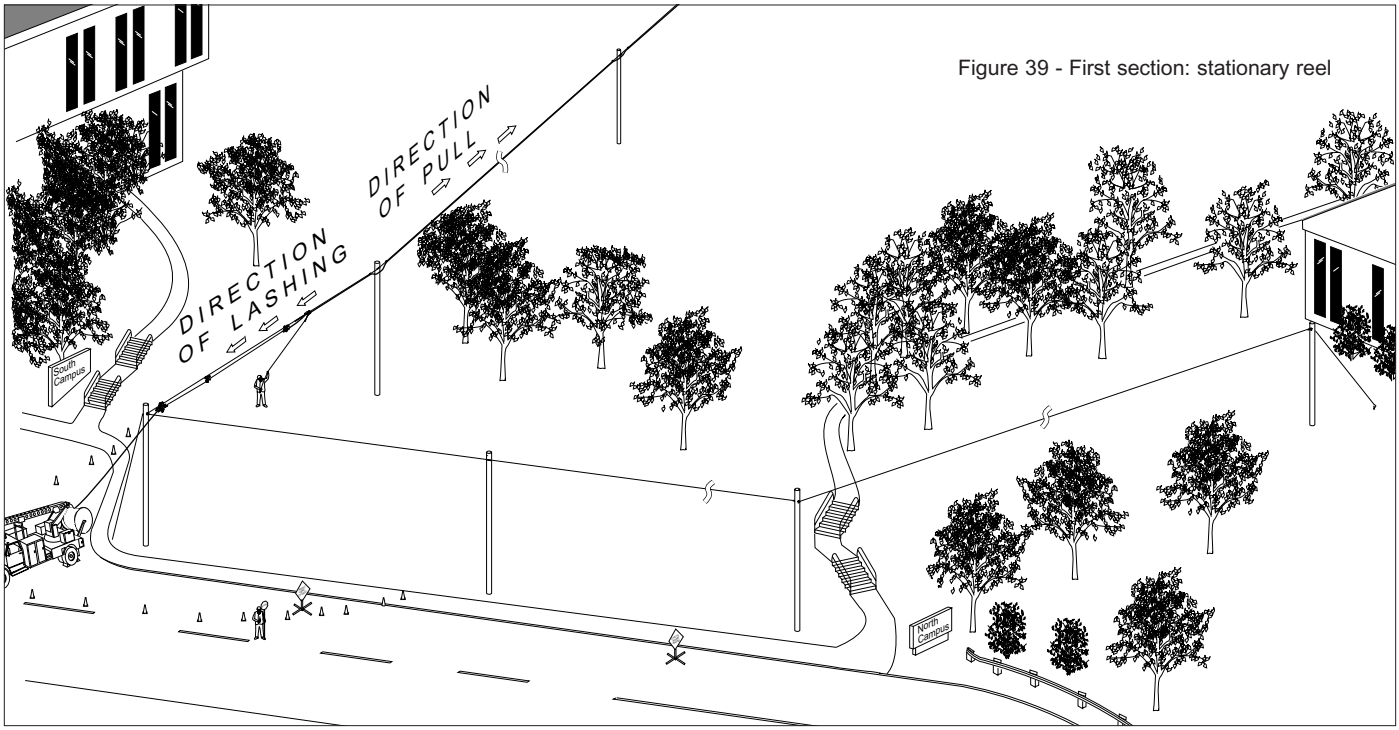

Figure 39 - First section: stationary reel

8.3 Following placement and lashing of this section, install the vehicle-accessible remainder of the cable route with the moving reel method (Figure 40).

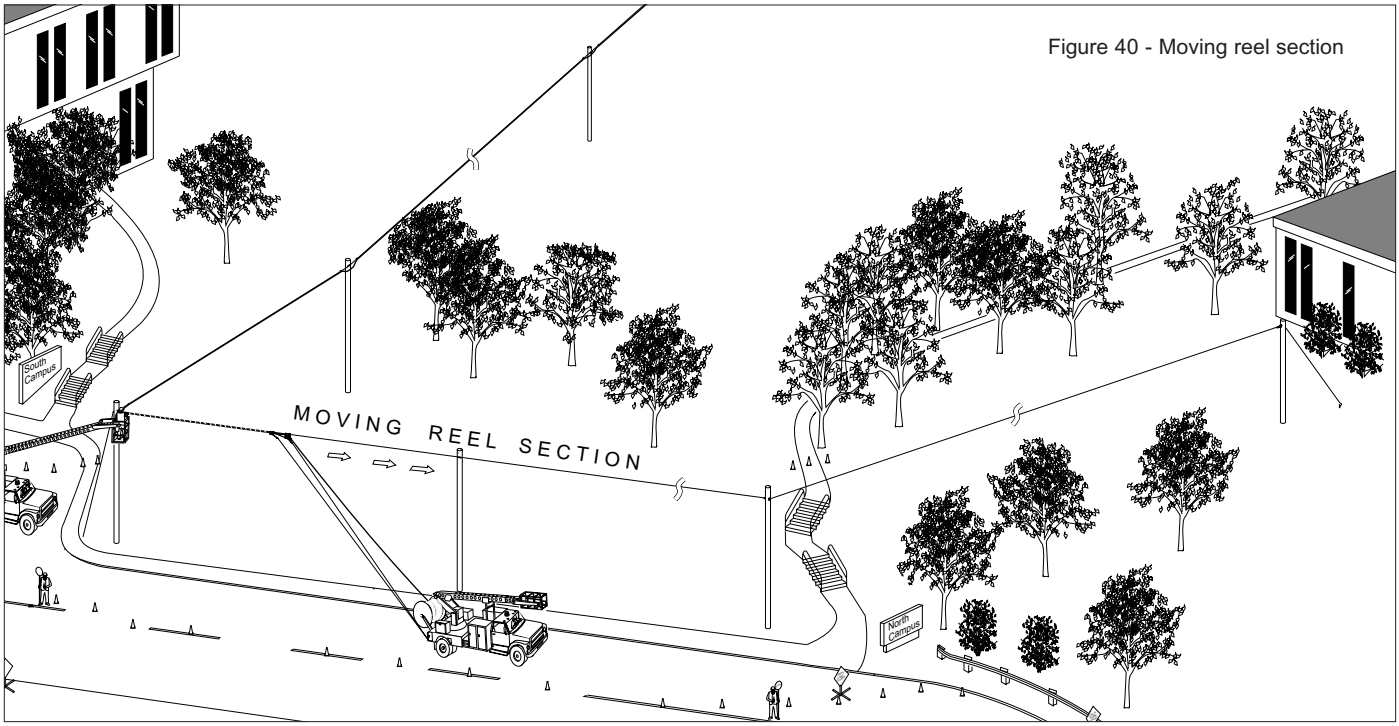

Figure 40 - Moving reel section

8.4 If the destination of the route is also inaccessible to vehicles, unreel and figure-eight the cable to gain access to the other end of the cable. Pull the cable into place beneath the strand with a stationary reel method (Figure 41).

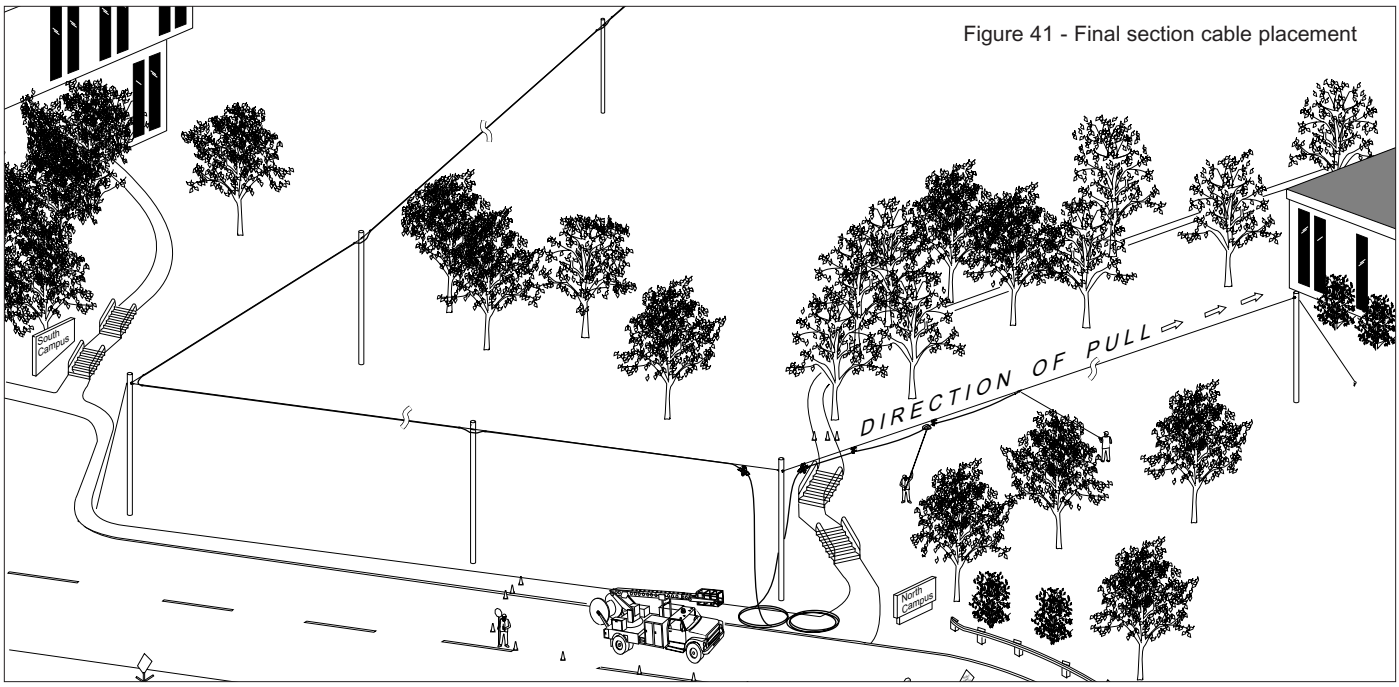

Figure 41 - Final section cable placement

8.5 This last section must be lashed form the moving/reel stationary reel transition point towards the free end of the cable (Figure 42).

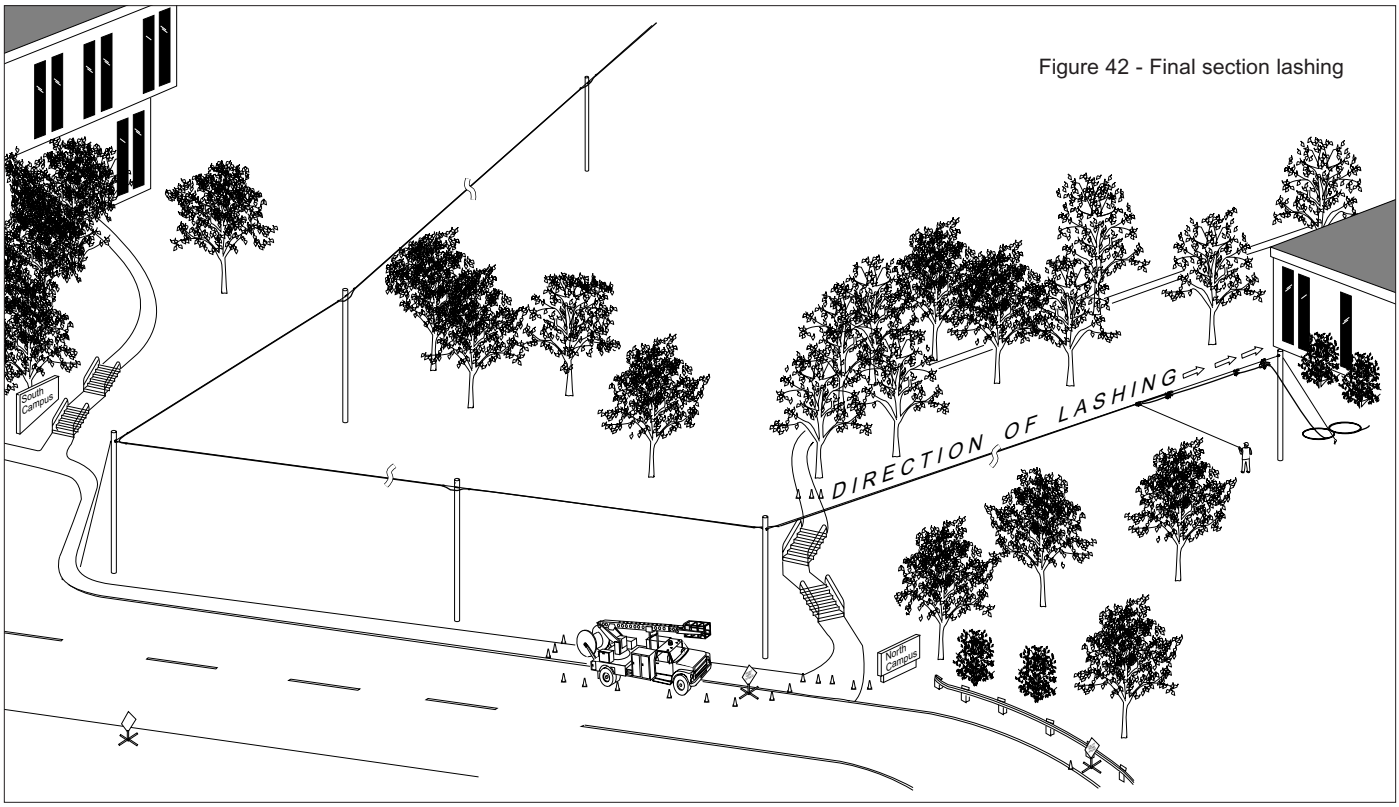

Figure 42 - Final section lashing

9. Post-Construction Inspection

9.1 Prior to splicing, a through inspection of the aerial plant must be made. Make this inspection on a span-by-span, foot-by-foot basis. The inspector should make notes regarding clean-up work on a copy of the system plans.

9.2 Check for following items during the post- construction inspection:

a) Conformance of the as-built aerial plant to the engineering plans. The exact location of all splice points should be noted so that they can be incorporated into the final design plans.

b) Presence of kinked or damaged cable.

c) Improperly installed or missing drip loops.

d) Improperly installed or missing grounds.

9.3 Upon completion of this inspection, the appropriate party (contractor, in-house construction crew, etc.) must correct all deficiencies.

Reinspect the corrections. When the AnyLAN™ Systems aerial plant passes this final construction inspection, the splicing, activation, and final alignment of the plant may proceed according to your company's normal operating procedures.

Corning Cable Systems LLC • PO Box 489 • Hickory, NC 28603-0489 USA
800-743-2675 • FAX: 828-901-5973 • International + 1-828-901-5000 • www.corning.com/cablesystems
Corning Cable Systems reserves the right to improve, enhance, and modify the features and specifications of Corning Cable Systems products without prior notification. AnyLAN is a trademark of Corning Cable Systems Brands, Inc. Corning is a registered trademark of Corning Incorporated. All other trademarks are the property of their respective holders. Corning Cable Systems is ISO 9001 certified.
© 2010 Corning Cable Systems LLC. All rights reserved.