OptiTap Adapter Jam Nut Toolkit

Revision History

Issue	Date	Reason for Change
1	08/2006	Initial Release

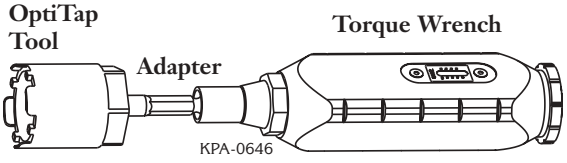

Qty	P/N	Item
1	3222010-01	Wrench-Torque, Cam-Over, 5-40 in-lbs
1	3222012-01	Wrench-Torque Adapter, 1/4 inch Square/Hex
1	3230089-01	Tool-Adapter Flange 1/4 inch

GENERAL

The OptiTap adapter jam nut toolkit (p/n TKT-OPT-JN) is used to remove and replace damaged or nonoperational OptiTap adapters in the field. The OptiTap tool fits into standard D-hole openings such as found on Corning Cable Systems' fiber-to-the-premises products. It can also be used to add adapters to terminals with blank D-hole openings. The Optical Access Connector Cleaning Kit (p/n TKT-OTAP-CLN-001, ordered separately) is recommended for cleaning the replacement adapter prior to mating with the connector.

REMOVE DAMAGED OPTITAP ADAPTER

Step 1 Open the product, such as an aerial or multiport terminal, containing the OptiTap adapter.

Step 2 Remove existing SC/APC and drop connectors (if present) from both sides of the OptiTap adapter.

Step 3 Align teeth on the OptiTap tool with the notches on the jam nut (Figure 1). Unscrew the jam nut and pull the adapter out of the terminal from the outside.

Step 4 Discard all pieces of the damaged OptiTap adapter.

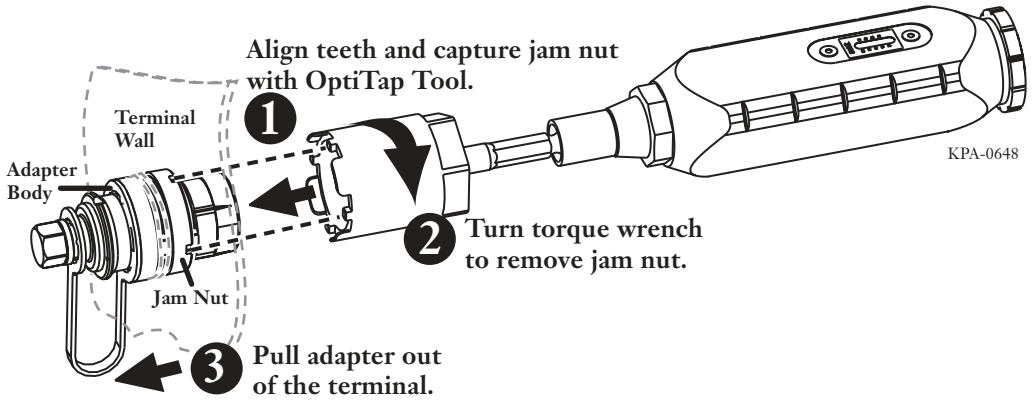

Figure 1 — Remove Damaged Adapter

INSTALL REPLACEMENT OPTITAP ADAPTER

Step 1 Place the O-ring on the back of the OptiTap adapter in the shoulder (Figure 2). Insert the replacement OptiTap adapter into the D-opening of the terminal. Line up the key and the flat sides of the adapter in the opening.

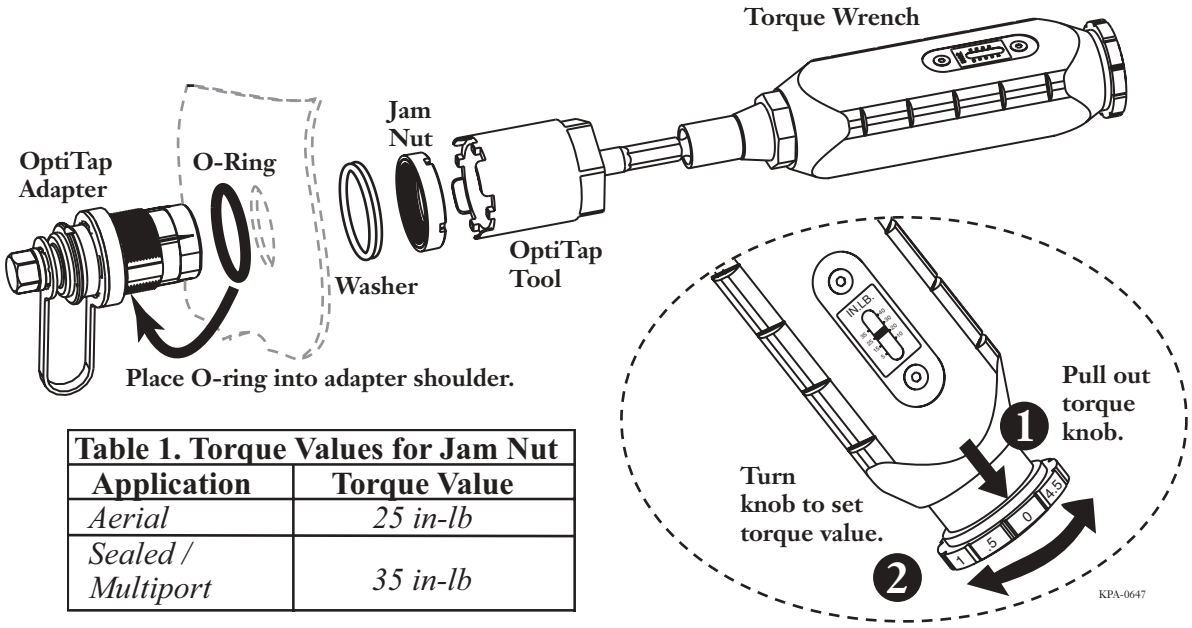

Table 1. Torque Values for Jam Nut	
Application	**Torque Value**
Aerial	*25 in-lb*
Sealed / Multiport	*35 in-lb*

Figure 2 — Install Replacement Adapter

Step 2 Place the washer on the back side of the OptiTap adapter on the inside of the terminal.

Step 3 Thread the jam nut onto the adapter with your fingers to avoid the possibility of cross-threading the jam nut.

Step 4 Dial in the proper torque value by pulling out the torque knob (Figure 3) and setting the value per Table 1 for the product into which the adapter is being installed. Push the knob back in.

Step 5 Align the teeth on the OptiTap tool with the notches on the jam nut. Torque the jam nut until the torque wrench rolls over and pops. It will not apply any more torsion forces after that point.

COMPLETE INSTALLATION

Clean the connector end-faces and adapter ports using the Optical Access Connector Cleaning Kit (p/n TKT-OTAP-CLN-001, follow instructions provided with the kit) or per standard company practices before mating in the replacement adapter. Close and secure the terminal per the instructions provided with the terminal.

Customer Service—US or Canada: 1-800-743-2671
International: +1-828-901-5000
Fax: +1-828-325-5060
Corning Cable Systems LLC, PO Box 489, Hickory, NC 28603-0489 USA
http://www.corning.com/cablesystems

Corning Cable Systems reserves the right to improve, enhance and modify the features and specifications of Corning Cable Systems' products without prior notification. All trademarks are the properties of their respective owners. Corning Cable Systems is ISO 9001 certified.
© 2006 Corning Cable Systems. All rights reserved. Published in the USA.
p/n 006-365 / August 2006