Indoor Flush Mount POTS Splitter Installation

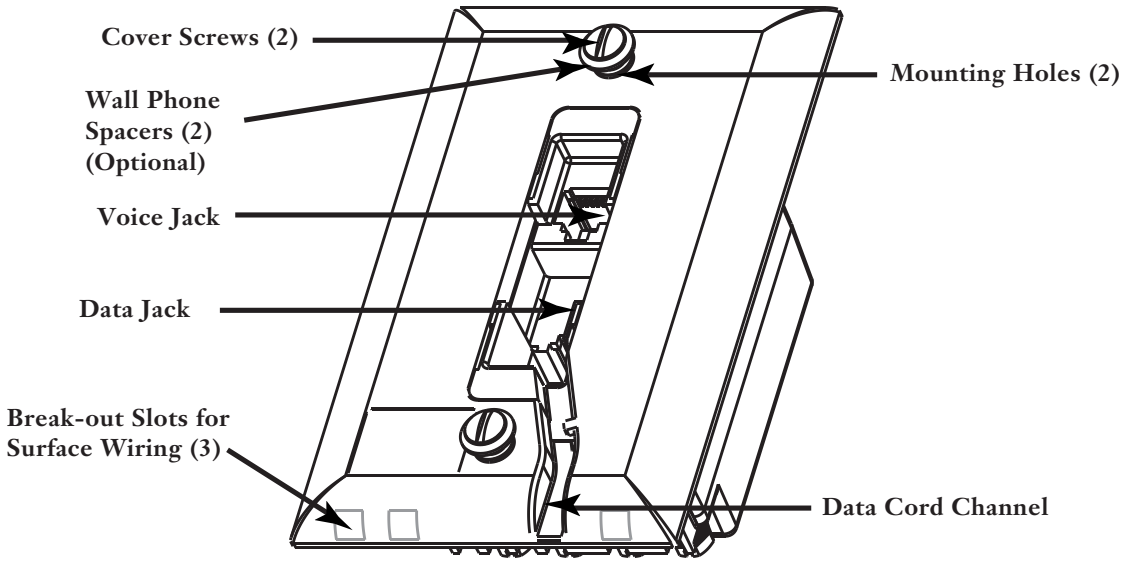

Figure 1

1. Description

The Indoor Flush Mount Unit (Figure 1) houses output jacks, screw binding posts, and electronics. The electronics is known as a "POTS Splitter". The POTS Splitter allows both voice and data signals to travel over the telephone line. This device splits the combined signal to provide separate outputs for both phone and data in the form of female jacks and screw terminals for wiring phone and data lines.

2. Tools and Equipment

The normal complement of tools are recommended for this installation. Wall anchors may also be required.

3. Mounting Location

This unit can be flush mounted to an interior wall or flush mounted directly to an outlet box inside the wall using the mounting holes provided (Figure 1). A wall phone may also be used with this product.

The best wall phone support is accomplished by mounting the unit directly to an outlet box attached to a wall stud. Adequate support can also be provided using wall anchors when mounting between studs.

4. Wiring

4.1 Surface Wiring: Wire entrance break-outs are located at the bottom of the face plate (Figure 1). Select a break-out slot appropriate for wiring. Cut along both outside edges of the break-out using a pair of cutters. Remove the break-out using a pair of needle nose pliers. Dress the wire through the slot and to the appropriate screw terminal.

4.2 Outlet Box Wiring: Thread the wire from the outlet box to the appropriate screw terminal on the back of the unit.

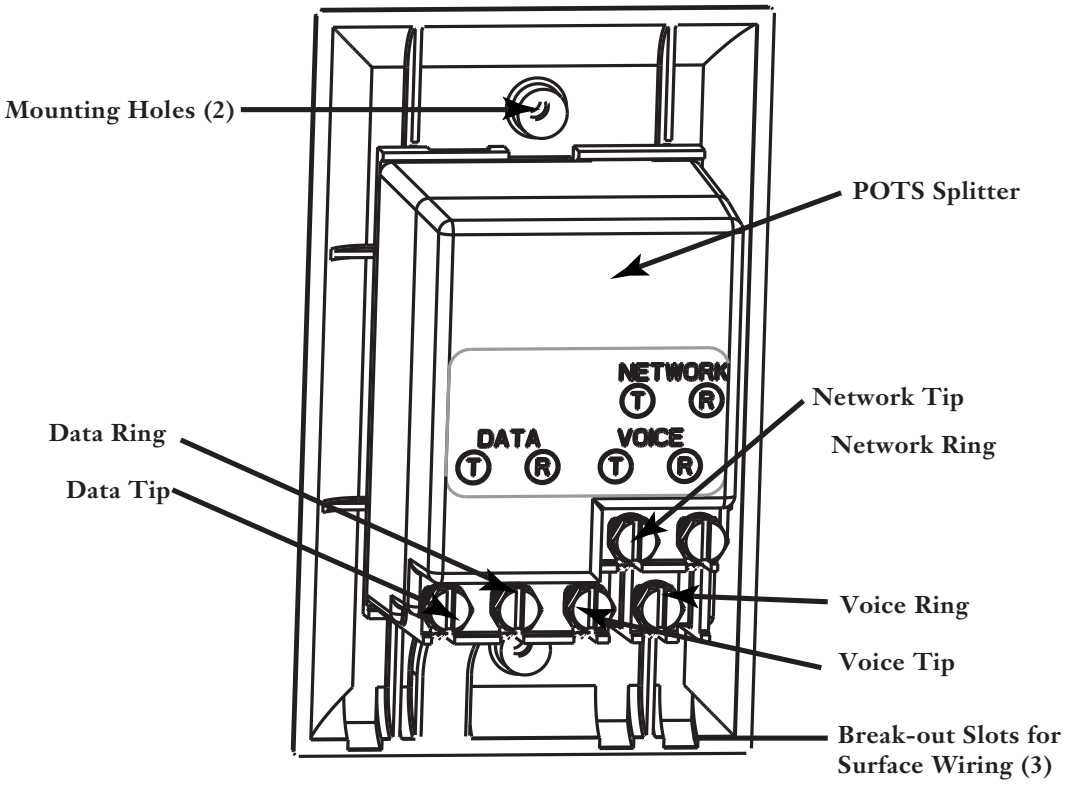

Figure 2

4.3 Product Wiring: Reference Figure 2.

Connecting Telco Wire – Wire the incoming telco wire to the screw terminals labeled "NETWORK" matching tip and ring.

Connecting Voice Lines – Wire voice lines to the screw terminals labeled "VOICE" matching tip and ring (and/or plug a voice line into the jack labeled "VOICE").

Connecting Data Line – Wire data line to the screw terminals labeled "DATA" (or plug a pre-connected data line into the jack labeled "DATA").

4.4 Wiring to Screw Terminals: Strip conductor wires back approximately 1/2 inch. Wrap bare wire around the screw terminal between two washers. Do not overlap wire on the terminal screws. Cut off any excess wire after tightening the screw terminal.

4.5 Connecting to Jacks: Using pre-connected plugs on the data or phone cords, simply plug the cord(s) into the appropriate jack(s) on the unit.

5. Securing the Unit

After wiring the unit, dress any excess wire inside the wall or outlet box behind the unit. Secure the unit by tightening the two cover screws to the outlet box or wall anchors. If installing a wall phone, use the wall phone spacers (Figure 1).

Corning Cable Systems reserves the right to improve, enhance, and modify the features and specifications of Corning Cable Systems' products without prior notification.

All trademarks are property of their respective holders.
Corning Cable Systems is certified ISO 9001.
©1999, 2001 Corning Cable Systems LLC. All rights reserved.

Corning Cable Systems LLC
PO Box 489
Hickory, NC 28603-0489 USA
FAX: 828-327-5973
International: 828-327-5000
http://www.corning.com/cablesystems