# SLM Adjunct Data Module with xDSL POTS Splitter

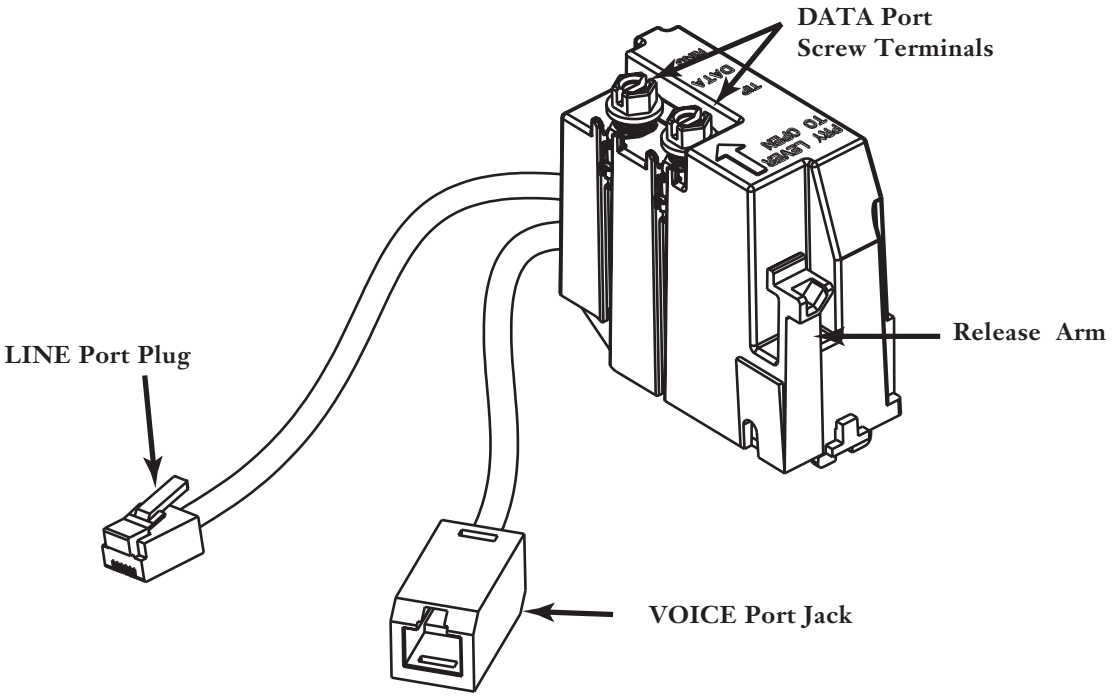


Figure 1

## 1. Description

**1.1** The SLM Adjunct Module with POTS Splitter (Figure 1) snaps into the Corning Cable Systems CAC® 9600 unit, the Corning Cable Systems CAC 7600 unit, or the NI-2000-series unit. CAC 7600 and NI-2000-series units require an adapter. This module houses electronics known as a "POTS Splitter." The POTS Splitter allows both voice and data signals to travel over the telephone line. This device splits the combined signal to provide separate outputs for both phone and data. The SLM Adjunct module must be used along with a Standard POTS Subscriber Line Module provided in the Outdoor Network Interface Device (NID). The SLM Adjunct Module with POTS Splitter and the Standard POTS Subscriber Line Modules are interconnected to provide the subscriber output screw terminals for wiring both voice and data.

**1.2** This document is being reissued to add capability to install the product in the NI-2000-series NID.

## 2. Accessing the Network Interface Device

Open the outer cover on the Outdoor NID by loosening the access screw and then releasing the snap latch on the right side of the unit.

## 3. Installing the SLM Adjunct Module with POTS Splitter

<u>Installing into CAC 9600:</u> Install the SLM Adjunct Module with POTS Splitter by snapping it into the appropriate line module position (Figure 2).

- Place the lower flange on the module under the base latch.
- Rotate the free side of the module down into the base.
- Snap the release arm on the module under the latch on the center wall of the unit.

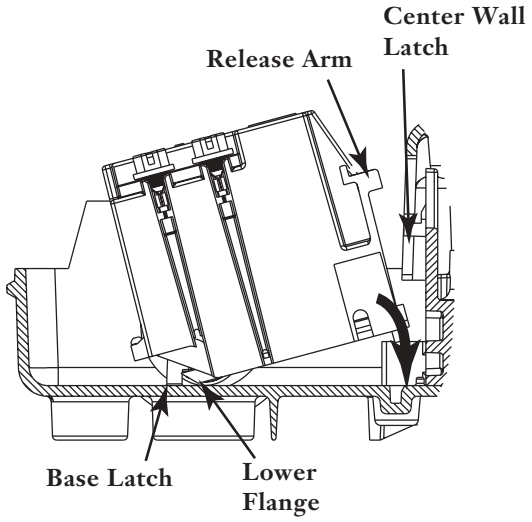


Figure 2

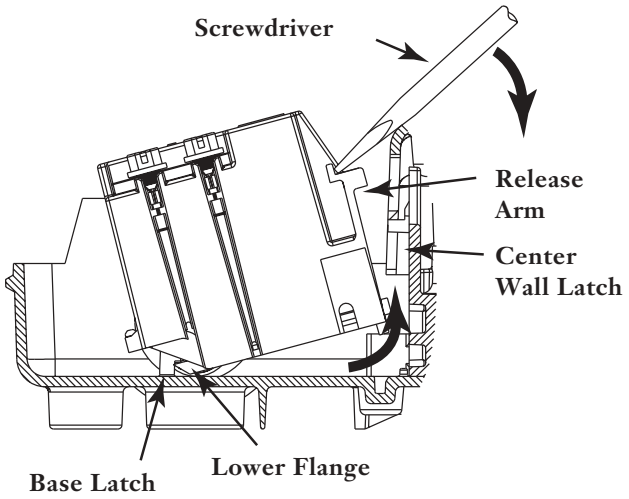


Figure 3

Installing into CAC 7600: Install the SLM Adjunct Module with POTS Splitter to the CAC 7600 adapter by snapping it onto the adapter. This assembly will then fit into any one of the line module positions in the CAC 7600 by snapping it into the base.

Installing into NI-2000-series NIDs: Install the SLM adjunct module with POTS splitter to the NI-2000 adapter by snapping it onto the adapter. Place the lower flanges into the base of any line module position. Rotate the free side of the module onto the ground bar.

**Interconnecting the SLM Adjunct Module with the Standard POTS Subscriber Line Module:**

- See inside door of NID for warnings before wiring.
- Unplug the line cord from the Standard POTS Subscriber Line Module (Figure 5).
- Plug that line cord into the VOICE Port jack coming from the SLM Adjunct Module.
- Interconnect the LINE Port plug coming from the SLM Adjunct Module to the test jack on the Standard POTS Subscriber Line Module.
- Dress any excess wire along the side of the base.

**After interconnecting the modules:** The output for VOICE wiring is still the screw terminals on the Standard POTS Subscriber Line Module, and the output for DATA wiring is the two screw terminals on top of the SLM Adjunct Module.

## 4. Removing the SLM Adjunct Module

To remove the SLM Adjunct Module, place a screwdriver between the telco shield and the release arm of the module. Rotate the screwdriver towards the telco shield to pry module from the unit (Figure 3).

## 5. Wiring for Voice and Data

**Grommet Preparation:** If routing additional wires through the rubber grommet located at the bottom of the unit, punch a small hole in the grommet as shown in Figure 4. Do not break through the edge of the grommet. Doing so may compromise the grommet's holding ability.

### Grommet Preparation

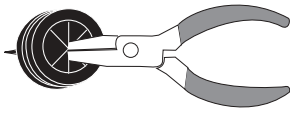

Use a pair of needle-nose pliers or sharp pencil to pierce the grommet. Do not use a knife or cutters.

Grommets must fit tightly to prevent the intrusion of insects, water, dirt, or foreign particles. A knife may cut all the way through the grommet, and cutters may cut a hole that is too large for a tight fit.

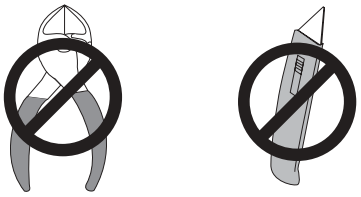

Figure 4

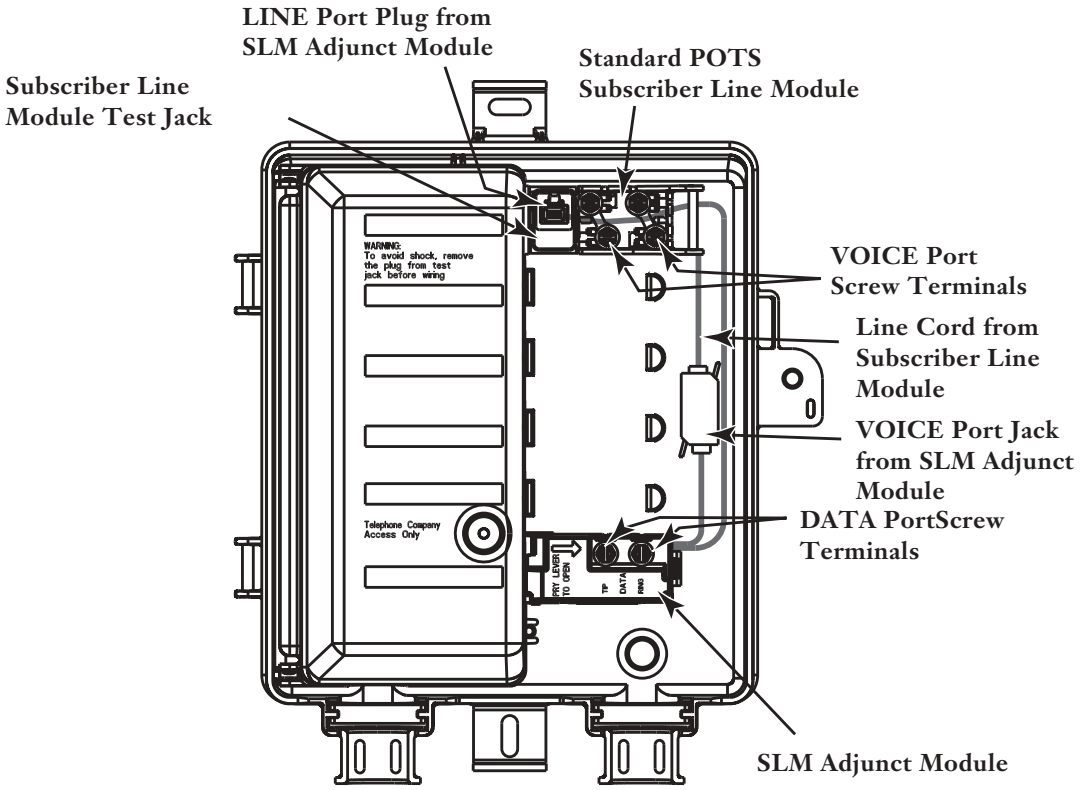


Figure 5

**Subscriber Wiring:**

- Route wires through the grommet located at the bottom of the unit and dress up to the appropriate module(s).
- Replace the grommet back into its slot in the base.
- Dress any excess wire along the side of the base.

VOICE Wiring: Connect the subscriber voice wires to the screw terminals on the Standard POTS Subscriber Line Module (Tip to green, Ring to red).

DATA Wiring: Connect the subscriber data wires to the screw terminals on the SLM Adjunct Module (Tip to black, Ring to yellow).

**Wiring to Screw Terminals:**

- Strip conductor wires back approximately 1/2 inch.
- Wrap the bare wire around the screw terminal between two washers. Do not overlap wire on the screws.
- Cut off any excess wire after tightening the screw terminal.

***IMPORTANT:*** *To prevent stripping plastic threads, tighten screws only until snug.*

## 6. Securing the NID Unit

Make sure the wire entry grommet is completely seated into position in the base. Close the outer cover by snapping it to the base. Tighten the access screw to secure the cover.

Customer Service—US or Canada: 1-800-743-2671
International: +1-828-901-5000
Fax: +1-828-325-5060

Corning Cable Systems LLC, PO Box 489, Hickory, NC 28603-0489 USA

http://www.corning.com/cablesystems

CORNING
Discovering Beyond Imagination


p/n 202-256 / August 2004