CORNING

Fiber Network Interface Device

P/N 202-306
Issue 3

related literature | Search www.corning.com/opcomm. Click on “Resources.”

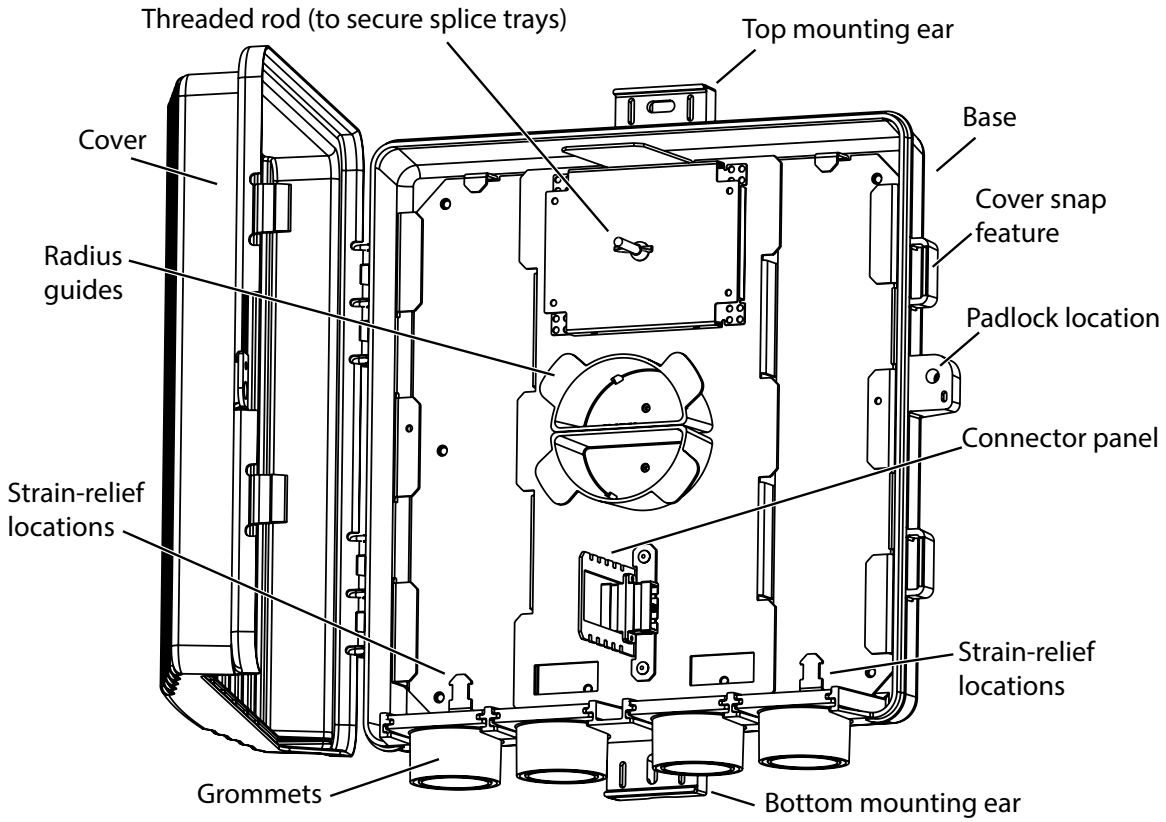

Figure 1

1. General

This document describes the recommended procedures for the installation of the network interface device (NID) with provisions for fiber interconnection.

- The fiber NID (Figure 1) is an outdoor demarcation point between a service provider’s feeder cable and a subscriber’s distribution cable for FTTX applications.
- The fiber NID contains up to six duplex adapters (purchased separately) and fusion splice trays (purchased separately) which allows network testing access. Each tray is dedicated to two pairs of input and output connectors.
- The outer door of the unit is secured with two snap features and a slotted screw with a location for a customer supplied padlock. The unit is opened using a standard telephone company 216B “can wrench” tool. No special tools are required for installation.

All applicable regulatory requirements supercede this document. Do not attempt an installation unless a copy of those requirements is available for reference.

2. Precautions

2.1 Laser Handling Precautions

	WARNING: Never look directly into the end of a fiber that may be carrying laser light. Laser light can be invisible and can damage your eyes. Viewing it directly does not cause pain. The iris of the eye will not close involuntarily as when viewing a bright light. Consequently, serious damage to the retina of the eye is possible. Should accidental eye exposure to laser light be suspected, arrange for an eye examination immediately.
	WARNING: DO NOT use magnifiers in the presence of laser radiation. Diffused laser light can cause eye damage if focused with optical instruments. Should accidental eye exposure to laser light be suspected, arrange for an eye examination immediately.

2.2 Safety Precautions

	CAUTION: Recommend the use of safety glasses (spectacles) conforming to ANSI Z87, for eye protection from accidental injury when handling chemicals, cables or fiber. Pieces of glass fiber are very sharp and have the potential to damage the eye.
	CAUTION: The wearing of cut-resistant safety gloves to protect your hands from accidental injury when using sharp-bladed tools and armored cable is strongly recommended. Use extreme care when working with severed armor. There will be a sharp edge where armor is cut. To minimize the chance of injury from the cut armor, cover the exposed edge with a wrap of electrical tape. To minimize the chance of injury from sharp-bladed tools, always cut away from yourself and others. Dispose of used blades and armor scrap properly.
	WARNING: Isopropyl alcohol is flammable with a flashpoint at 54°F. It can cause irritation to eyes on contact. In case of contact, flush eyes with water for at least 15 minutes. Inhalation of vapors irritates the respiratory tract. Exposure to high concentrations has a narcotic effect, producing symptoms of dizziness, drowsiness, headache, staggering, unconsciousness, and possibly death.

2.3 Glass Fiber Precautions

	CAUTION: Cleaved or broken glass fibers are very sharp and can pierce the skin easily. Do not let these pieces of fiber stick to your clothing or drop in the work area where they can cause injury later. Use tweezers to pick up cleaved or broken pieces of glass fibers and place them on a loop of tape kept for that purpose alone. **Good housekeeping is very important.**

2.4 Cable Handling Precautions

	CAUTION: Fiber optic cable is sensitive to excessive pulling, bending, and crushing forces. Consult the cable specification sheet for the cable you are installing. Do not bend the cable more sharply than the minimum recommended bend radius. Do not apply more pulling force to the cable than specified. Do not crush the cable or allow it to kink. Doing so may cause damage that can alter the transmission characteristics of the cable; the cable may have to be replaced.

NOTE: *Obey the following precautions in order not to damage the surface of the connector and make it unusable:*

- Use a clean lint-free tissue soaked in alcohol to gently clean the connector. Do not press heavily on it as you clean.
- Clean all areas that will contact the connector adapter.
- Dry the connector prior to installation by using a tissue or blowing it dry with filtered air.

3. Mounting

3.1 Location

Install to a vertical surface near approved ground but away from down spouts, permanent water sprinklers, and other water sources. Allow accessibility for installation and maintenance.

3.2 Wall-mounting

Step 1: Prepare a mounting hole for the top mounting ear (Figure 2A).

Step 2: Use at least #8 hardware to loosely mount unit to dwelling with the enclosure vertical and the entry grommets at the bottom. Depending on the screw head size, flat washers may be required.

Step 3: Mark and prepare bottom mounting hole location.

Step 4: Secure screws at top and bottom. Ensure that unit is square to the mounting surface to prevent warping. Shim with flat washers or equivalent, if necessary.

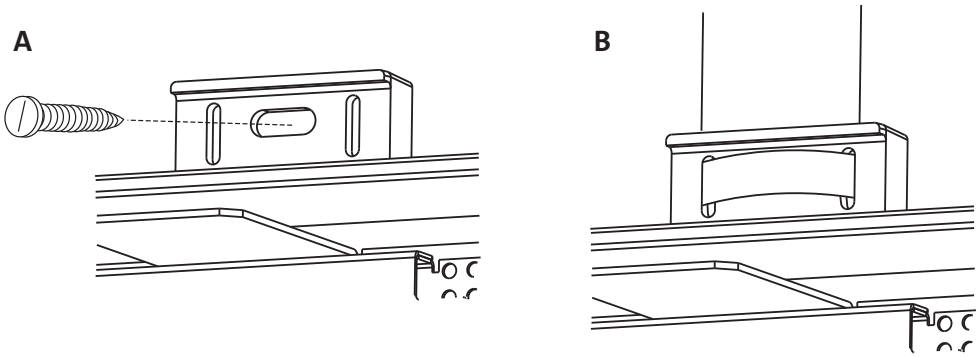

Figure 2

3.3 Conduit-Mounting

Use only vertical conduit when mounting unit. To secure the unit, use a large metal strap or cable tie.

Step 1: Position unit vertically with the entry grommets at the bottom.

Step 2: Route strap or cable tie around the conduit and through top mounting ear of the unit. Tighten securely (Figure 2B).

Step 3: Repeat Step 2 for bottom mounting ear.

4. Fiber Installation

Step 1: Remove cable sheath as illustrated in Figure 3. Do not expose the bare fiber until you are ready to splice.

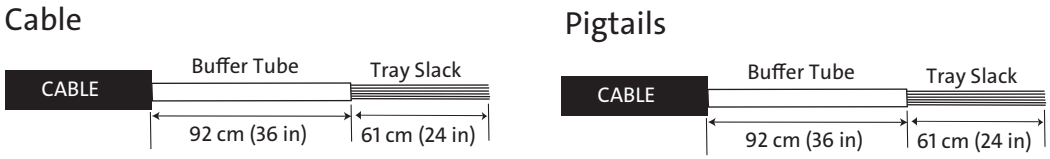

Figure 3

Step 2: Strain-relieve feeder cable:

a. Determine cable entry location and prepare grommet as shown in Figure 4. Cable can enter the unit from either of the outer grommet locations. Pierce the grommet using a pair of needle-nose pliers or a sharp pencil. Do not use a knife or cutters; grommets must fit tightly to prevent the intrusion of foreign particles.

b. Feed cable through the pierced grommet and reinstall grommet into unit.

c. Install hose clamp onto cable and secure to flange as shown in Figure 5A.

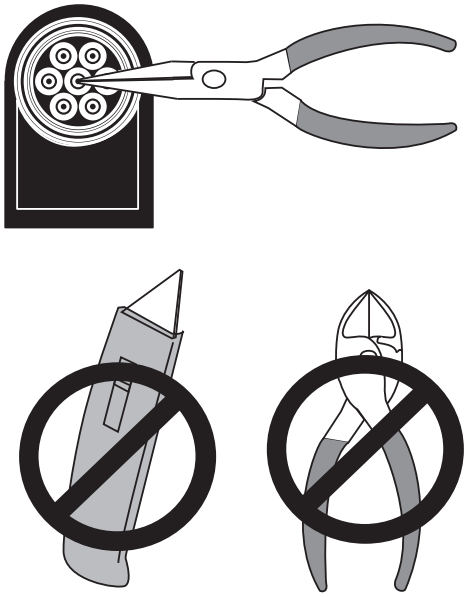

Figure 4

Step 3: Install buffer tube fan-out kit (purchased separately) as described in the instruction provided with the kit. Fan-out body can be secured on either side of the unit.

Step 4: Route feeder cable (Figure 5):

a. Loop buffer tube slack.

b. Secure fan-out body to the unit using the provided screw (Figure 5B).

c. Route transport tubes.

Step 5: Install distribution cable:

a. Determine cable entry location and prepare grommet as shown in Figure 4.

b. Feed cable through the pierced grommet.

c. Secure cable to flange using a cable tie as shown in Figure 5C.

Step 6: Route distribution cable as shown in Figure 5.

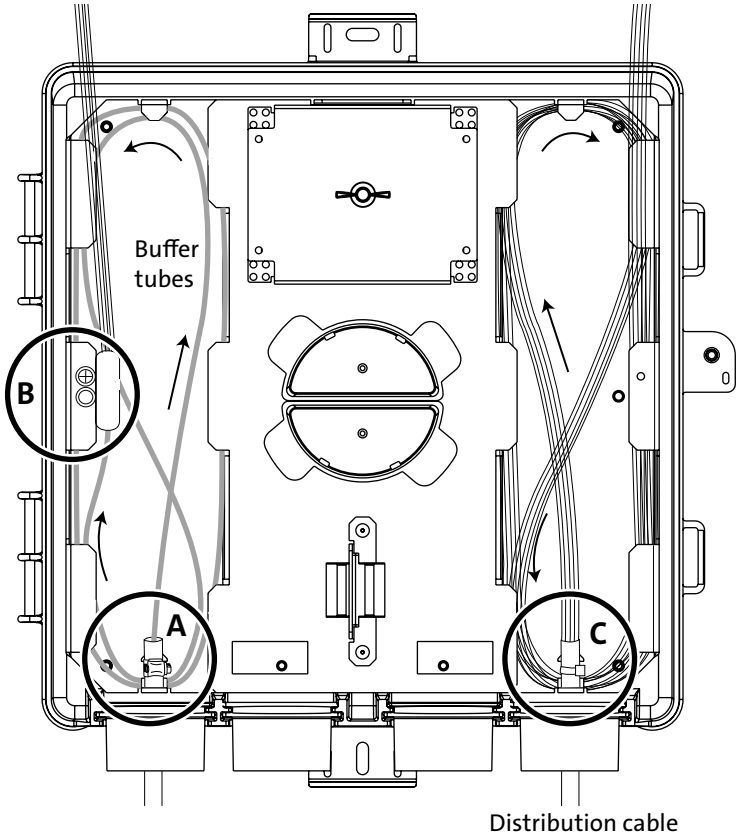

Figure 5

5. Splice Trays

Step 1: Follow instructions provided with the splice tray (purchased separately) and secure transport tube and pigtail to tray. Place the provided split grommet (shown in inset) around the transport tube, then secure with two cable ties.

NOTE: *Secure incoming fibers to the top of the tray and outgoing pigtails to the bottom of the tray.*

a. Splice a feeder pigtail (Figure 6) (shown with dashed line) to the transport tube fiber (shown with solid line) according to the instruction provided with your splicing equipment.

b. Splice a distribution pigtail (shown with dashed line) (Figure 7 — Feeder fibers not shown for clarity) to the distribution fiber (shown with solid line) according to the instruction provided with your splicing equipment.

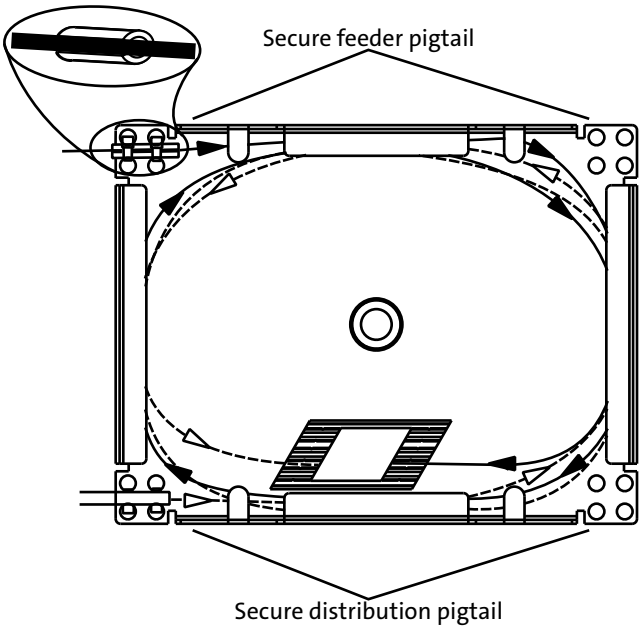

Figure 6

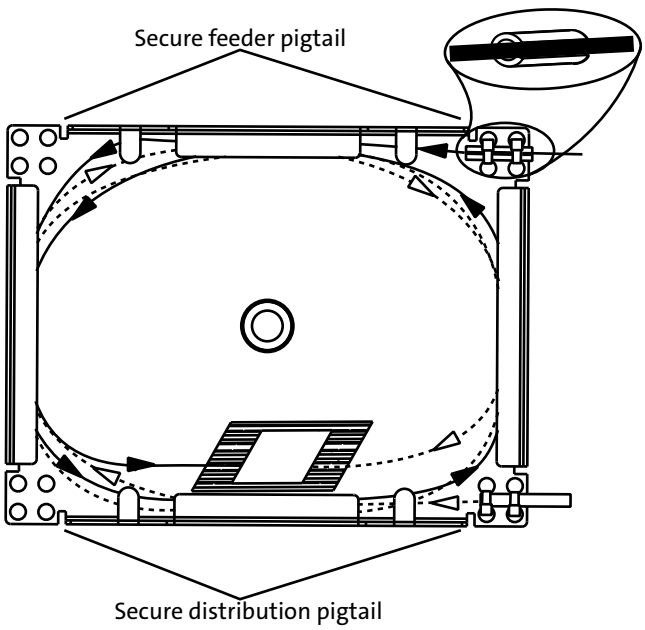

Figure 7

Step 2: Route fiber:

a. Place the spliced tray over the threaded rod.

b. Route the feeder pigtails around the radius guides (Figure 8A).

c. Plug feeder pigtails into the appropriate adapters (Figure 8A).

d. Repeat Step 2 for the distribution fiber (Figure 8B).

Step 3: Repeat Steps 1 and 2 for the remaining splice trays. Once all trays are spliced, secure the trays to the threaded rod using the wing nut.

Step 4: Close door of unit and fasten securely. If desired, a padlock can be installed through the padlock hole shown in Figure 1.

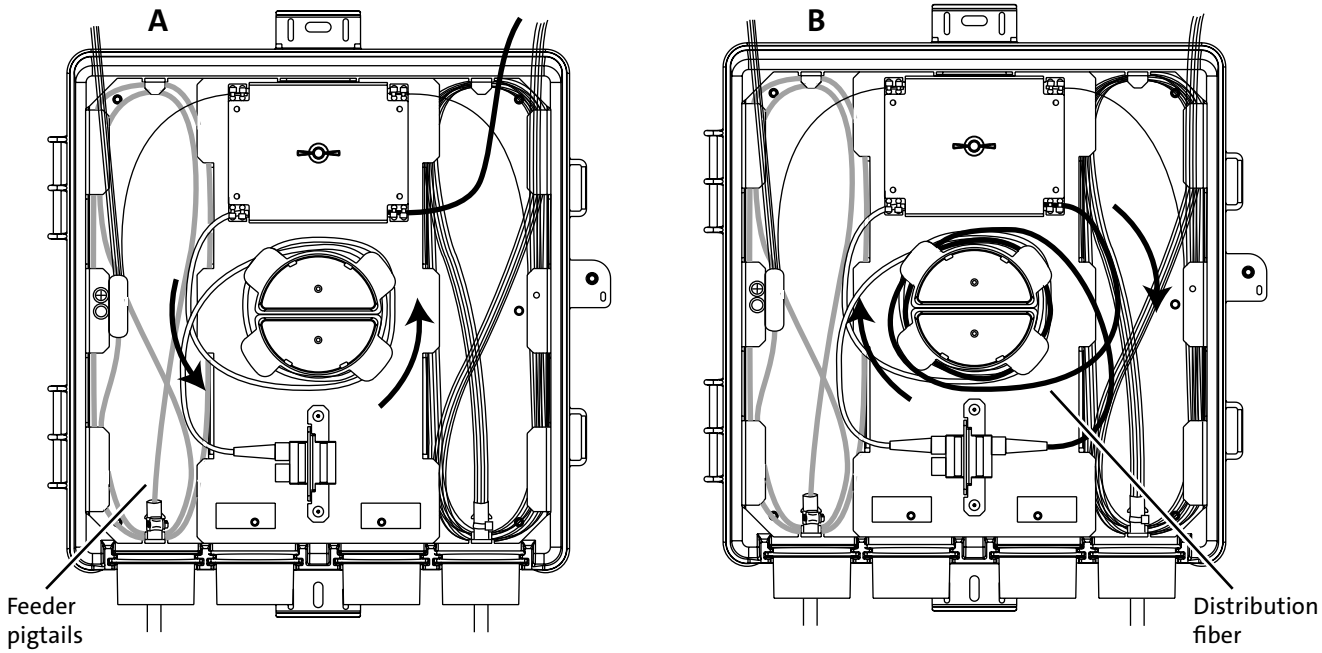

Figure 8

6. Adapter Installation

The adapter panel is designed to hold from one to six duplex adapters. If less than six are installed, place a cable tie directly above the adapter and in the appropriate slots along both edges of the bracket to hold the adapter in place (Figure 9).

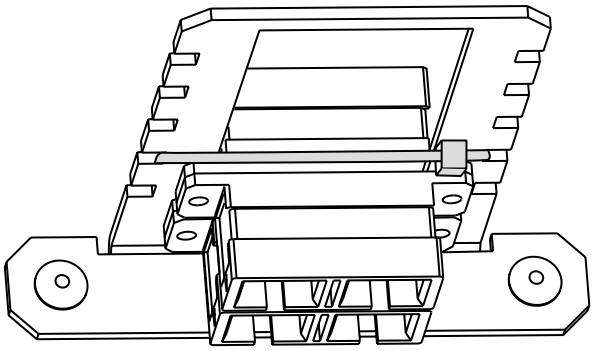

Figure 9

Corning Optical Communications LLC • PO Box 489 • Hickory, NC 28603-0489 USA
800-743-2675 • FAX: 828-325-5060 • International: +1-828-901-5000 • www.corning.com/opcomm