CORNING

Corning Mass/Local ORS Heat-shrink Closures Installation Instructions

206-423, Issue 6

1. Carton Contents

- (1) Closure dome
- (1) Frame assembly
- (1) Heat-shrink end cap
- (1) Clamping ring
- (1) End cap sealing ring
- (7) Aluminium foil
- (1) Accessory kit

Accessory Kit contents					
(1)	Tissue, Cleaning, Isopropylic	 TPA-3824	(1)	Brush, UCN Lube	 TPA-3826
(1)	Lubricant	 TPA-3828	(5)	Clip, 3-finger Branching	 TPA-3836
(1)	Sandpaper	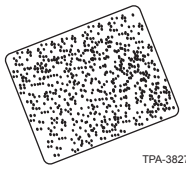 TPA-3827	(5)	Strain-relief Kit	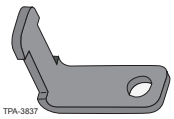 TPA-3837
(5)	Cable Tie	 TPA-3822	(7)	Aluminium foil	

2. Tools and Materials

The following tools and materials are required to complete this installation:

- Tape measure
- Scissors
- Side cutter
- Cable knife
- 1/2-inch deep socket and ratchet
- 3/8-inch nut driver
- 7/16-inch nut driver
- 5/16-inch nut driver
- 11/32-inch nut driver
- 10mm socket and ratchet
- (OPTIONAL) Installation support clamp
- Flat-tipped screwdriver
- Phillips-head screwdriver
- Permanent marker pen
- Paint marker pen
- Electrical tape
- Heat gun
- Torque wrench
- Hand pump
- Air pressure gauge
- Soapy water (to verify leaks)

3. Precautions

3.1 Laser Handling

	WARNING: Never look directly into the end of a fiber that may be carrying laser light. Laser light can be invisible and can damage your eyes. Viewing it directly does not cause pain. The iris of the eye will not close involuntarily as when viewing a bright light. Consequently, serious damage to the retina of the eye is possible. Should accidental eye exposure to laser light be suspected, arrange for an eye examination immediately.

	WARNING: DO NOT use magnifiers in the presence of laser radiation. Diffused laser light can cause eye damage if focused with optical instruments. Should accidental eye exposure to laser light be suspected, arrange for an eye examination immediately.

3.2 Glass Fiber

	CAUTION: Cleaved or broken glass fibers are very sharp and can pierce the skin easily. Do not let these pieces of fiber stick to your clothing or drop in the work area where they can cause injury later. Use tweezers to pick up cleaved or broken pieces of glass fibers and place them on a loop of tape kept for that purpose alone. **Good housekeeping is very important.**

3.3 Chemicals

	WARNING: Isopropyl alcohol is flammable with a flashpoint at 54ºF. It can cause irritation to eyes on contact. In case of contact, flush eyes with water for at least 15 minutes. Inhalation of vapors irritates the respiratory tract. Exposure to high concentrations has a narcotic effect, producing symptoms of dizziness, drowsiness, headache, staggering, unconsciousness and possibly death.

	CAUTION: Use cable cleaner in a well-ventilated area to eliminate the possibiity of dizziness and nausea. If cleaner comes in contact with skin or eyes, wash area immediately with soap and water to avoid irritation. Do not induce vomiting if cleaner is ingested.

4. Prepare the Cable

Remove indicated length of cable sheath (Figure 1) according to the instructions described in the cable stripping procedure (p/n 004-162).

Multiple cables may be installed in the ports. Refer to Figure 2 for details.

IMPORTANT: Do not expose the bare fibres until after the cable has been placed in the closure end cap.

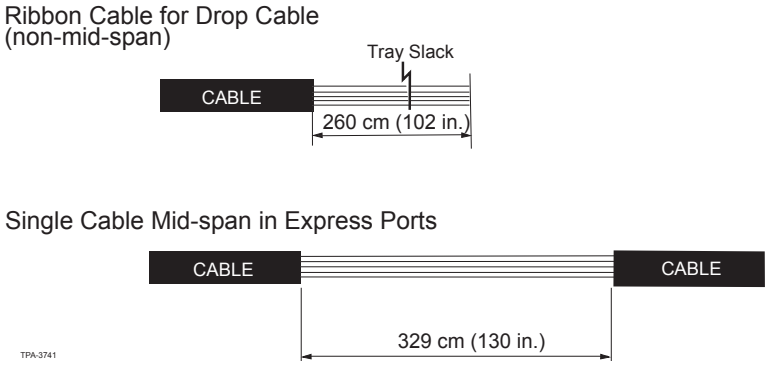

Figure 1

5. Prepare End Cap

Step 1: Remove the frame from the end cap.

Step 2: Open the appropriate cable port for your application based on the table in Figure 2. When using ports other than the oval port, use a taller port before using a shorter port.

Step 3: Carefully tap the end using a punch or a nut driver (Figure 3).

Step 4: Clean the port opening with a file to remove any rough edges.

Maximum Number of Cables Per Port			
Port Number	Ribbon Cable Types		
	Altos (288F-864F)	SST (72F-144F)	RPX (72F-144F)
Port A	2	-	-
	1	2	-
	1	-	2
	1	1	1
Port B	1	-	-
	-	-	3
	-	2	1
	-	1	2
Port C	-	1	1
	-	-	2
Port D	-	-	1

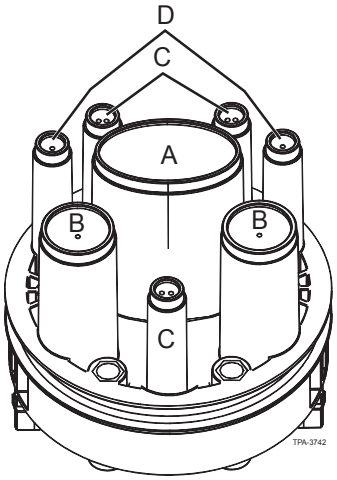

Figure 2

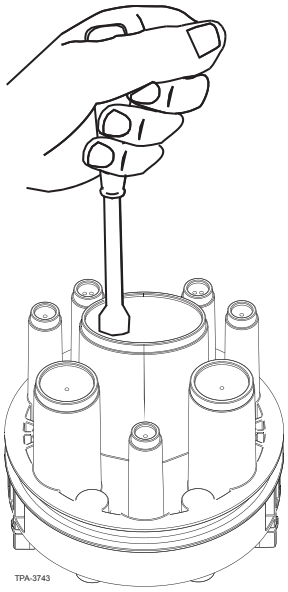

Figure 3

6. Prepare the Cable

Step 1: Install the sealing ring onto the cables in the orientation shown in Figure 4. Slide it out of the way until it is required to seal the closure in Section 11.

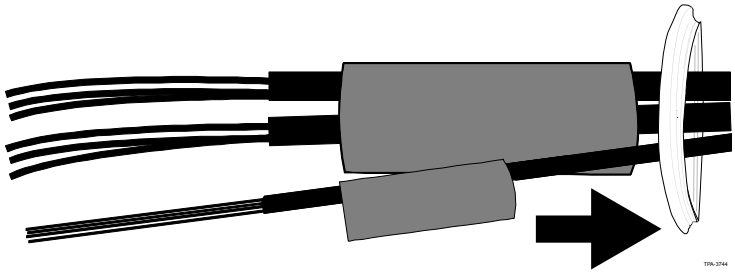

Figure 4

Step 1: Remove indicated length of cable sheath according to Figure 2.

Step 2: Slide the heat-shrink tubing over the cable as shown in Figure 5.

Step 3: Mark the cable 229 mm from sheath opening. Apply provided foil to the cable at the mark shown in Figure 5.

Step 4: Pull the cable through the end cap an additional 300 mm to allow for strain-relief installation.

Figure 5

NOTE: Heat-shrink kits, including strain-relief brackets, are required with closure for ports A, B, and C. Additional heat-shrink kits may be purchased separately.

NOTE: When using RPX® cable, take the sheath into the side compartment up to the frame.

7. Install Strain-relief Hardware

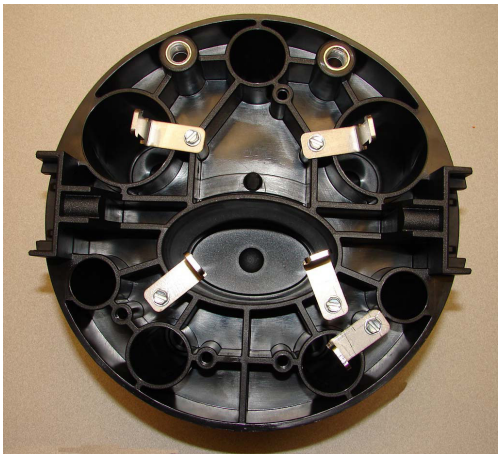

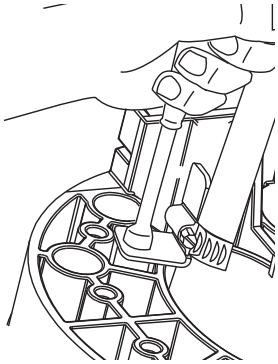

Figure 6

Step 1: Install the strain-relief brackets inside the end cap as shown in Figure 6.

Step 2: Wrap a large hose clamp around the bracket and cable approximately 150mm below the sheath opening. Ensure ribbons are not exposed outside the management frame.

Step 3: Position the hose clamp around the cable and the bracket.

Step 4: Tighten the hose clamp in the notch on the bracket.

Step 5: Secure the assembly to the end cap using the provided screw (Figure 6).

8. Install Cable

IMPORTANT: Torches are not recommended for the application of the heat-shrink tubes included with this kit. Certain combinations of cable sheath materials and torches may cause sheath blistering.

Step 1: Clean and roughen the cable approximately 75 or 100mm towards the end of the cable using the supplied sandpaper.

Step 2: Roughen the appropriate cable port to ensure heat-shrink adhesion.

Step 3: Carefully preheat the port and cable with the heat gun.

Step 4: Slide the heat-shrink tube over the port until it butts against the end cap.

Step 5: Pull the cable(s) back through the port.

Step 6: If more than one cable is being installed in the oval port, position the 3-finger clip between the two cables at the end of the heat-shrink tube (Figure 7).

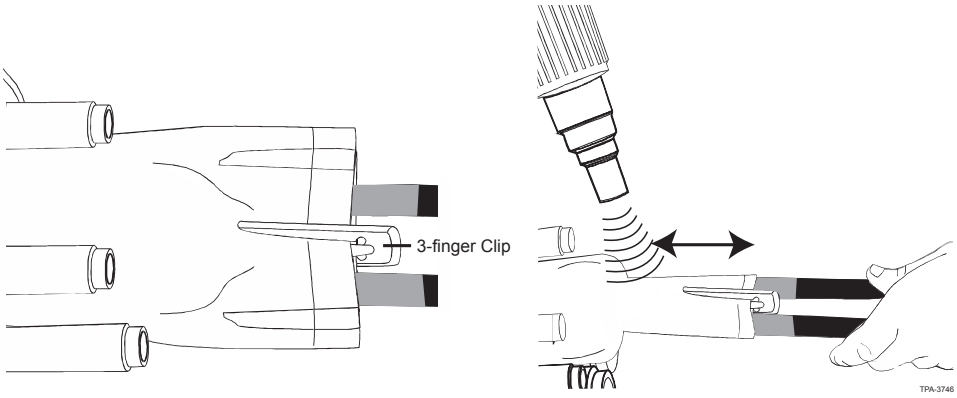

Figure 7

Step 7: Hold the cable while heating to prevent any movement.

Step 8: Beginning at the port, gradually move a heat gun down the tube (Figure 7). Allow this portion of the tube to cool before shrinking the rest of the tube onto the cable.

9. Load the ORS Frame

Attach the frame to the end cap.

IMPORTANT: Basic ribbon fibre routing requires Ribbon “A” spliced to Ribbon “B.” Ribbon “B” will be routed to the side storage compartment and side of the splice plane opposite from Ribbon “A.”

9.1 Route express fibres

Step 1: Loop the express ribbon in the middle compartment of the ORS and temporarily secure with tape.

IMPORTANT: DO NOT secure the uncut express slack in the plastic clip (“A”) on the interior of the middle compartment. This clip is to secure the fibres from the express port that are to be spliced as they are routed from the express compartment to the side storage compartment.

Step 2: Determine the length required and cut the express fibres to be spliced.

Step 3: Open the first clip (“A”) (Figure 8) in the middle compartment.

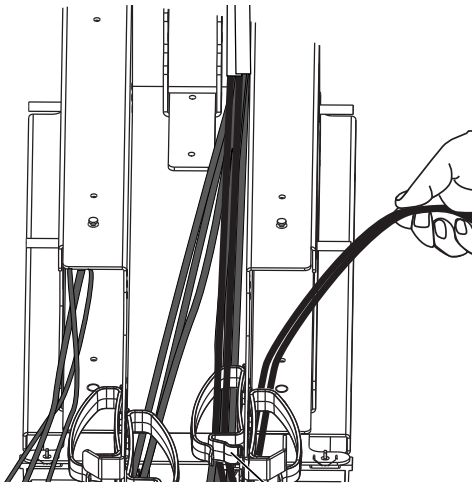

Figure 8

Step 4: Route the cut express fibres (that are to be spliced) through the clip and into the side storage area. Note the counterclockwise path as shown for this particular side.

Step 5: Loop all the express ribbon fibres (that are to be spliced) from the express area and into their respective side storage areas.

NOTE: A loop of fibre slack can be stored in the side storage areas with the loop routed respectively for each side as shown. The loop is limited at the top by the plastic clip (“B”) (Figure 9). Secure the slack loop with hook-and-loop straps as needed for fibre management.

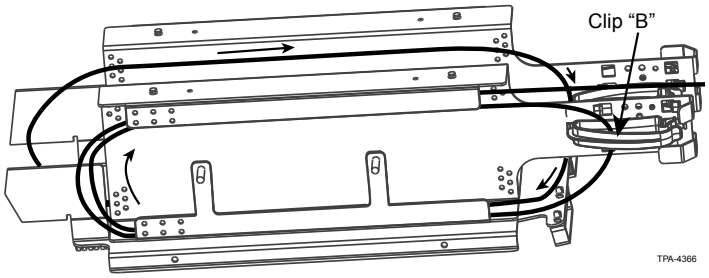

Figure 9

Step 6: Attach the express cover once the fibres are routed into the side storage area (Figure 10).

Step 7: Leave the extra length of fibres lying on the table. Wrap the bundle temporarily with tape.

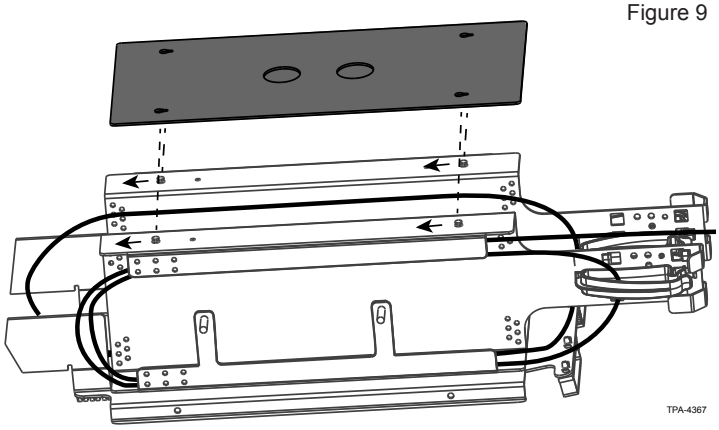

Figure 10

9.2 Route branch fibres from branch cables

Step 1: Route fibre from the branch port cable directly into the side storage compartment.

Step 2: When splicing to more than one branch cable, prepare the other side for routing per section 3.3.1.

IMPORTANT: Do not move fibres to the splice plane until both sides are routed.

9.3 Route branch fibres to the splice plane

Step 1: Carefully turn the closure over until the splice plane is on top. Remove the splice plane cover (Figure 11).

Step 2: Take the bundle of fibres wrapped in tape through the side plastic clip (“B”) and remove the tape.

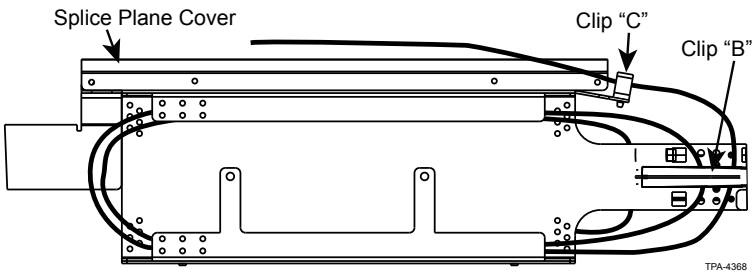

Figure 11

Step 3: Close the clip to secure the fibres within it.

Step 4: Open the plastic clip on the splice plane (Clip “C”) and lay the fibres inside (Figure 12).

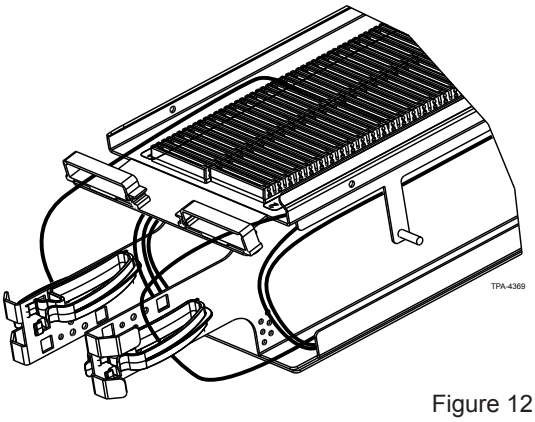

Figure 12

Step 5: Carefully close Clip “C” (Figure 13).

Step 6: Lay the fibres all the way down the splice plane on the side of the organiser. Maintain a full loop of slack in the storage area.

Step 7: Temporarily secure the fibres at the bottom of the ORS with another piece of tape.

Step 8: Repeat section 3.13.2 for the branch cable routed on the other side.

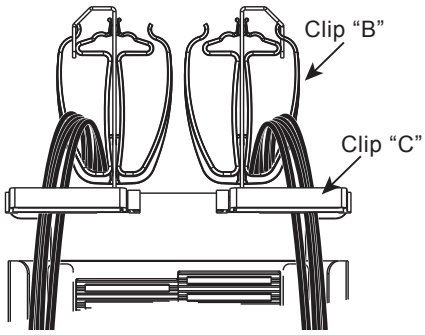

Figure 13

10. Splice

	**WARNING: Never look directly into the end of a fiber that may be carrying laser light.** Laser light can be invisible and can damage your eyes. Viewing it directly does not cause pain. The iris of the eye will not close involuntarily as when viewing a bright light. Consequently, serious damage to the retina of the eye is possible. Should accidental eye exposure to laser light be suspected, arrange for an eye examination immediately.

	WARNING: DO NOT use magnifiers in the presence of laser radiation. Diffused laser light can cause eye damage if focused with optical instruments. Should accidental eye exposure to laser light be suspected, arrange for an eye examination immediately.

IMPORTANT: Before cutting, make sure there is a complete loop of fibres in the side storage compartment and the fibres lie neatly in the trough of the splice plane.

10.1 Prepare fibres for splicing

Step 1: To ensure the appropriate length of slack fibres, cut the fibres extending beyond the bottom of the closure as shown in Figure 14.

Step 2: Remove the tape from the fibres (Figure 15).

Step 3: Remove the fibres from the top plastic clips (Clip “C”).

Step 4: Lay all fibres on the table.

Step 5: Determine which two ribbon fibres are to be spliced (one from the left and one from the right).

Step 6: Route them through the clip again and into the bottom of the closure. Do not close the clip at this time.

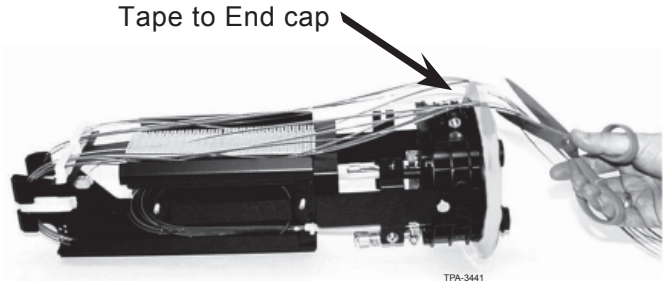

Figure 14

Step 7: Bring the two fibres to the first position in the organiser.

Step 8: Temporarily lay the fibres in the organiser to determine the required length.

Step 9: Cut both fibres at the same time in the center of the organiser.

10.2 Splice fibres

Step 1: Splice the fibres according to the instructions for the splicing equipment you are using.

Step 2: Insert the protected splice (heat-shrink splice protectors are recommended) back into the first slot in the organiser (Figure 15).

Step 3: Repeat from Step 5 in section 3.4.1 for all required splices. Install splices into the organiser consecutively.

NOTE: Each slot in the organiser accepts two splices. Install the second splice on top of the first splice before proceeding to the next slot in the organiser.

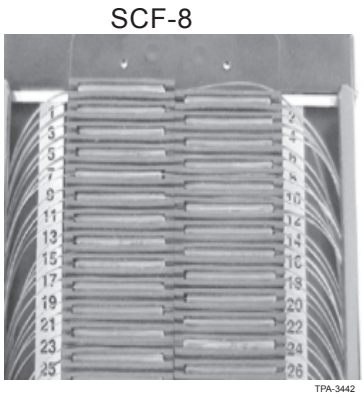

Figure 15

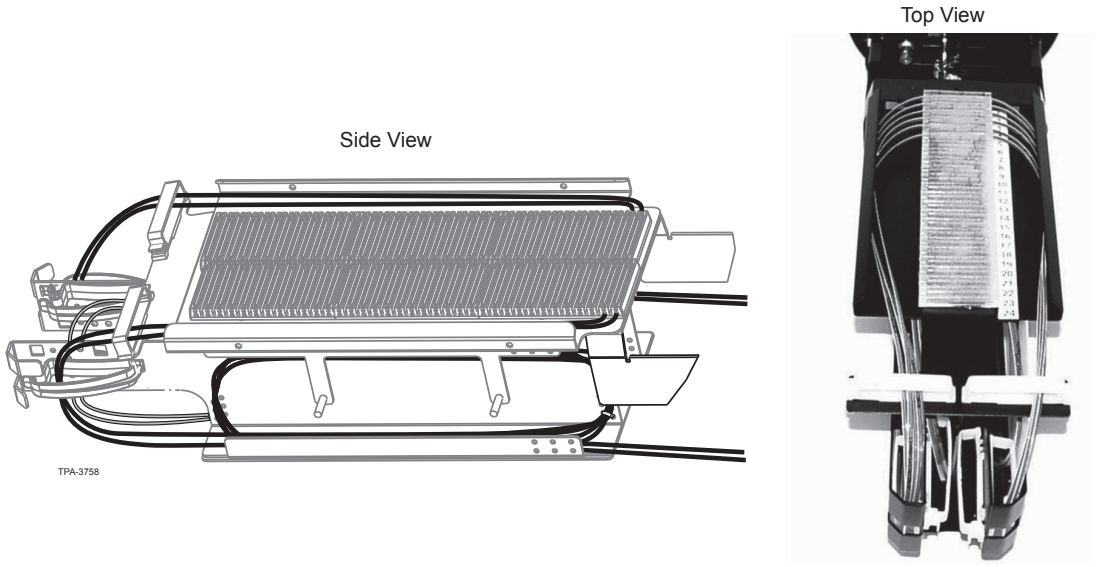

Figure 16

Step 4: Secure the spliced ribbons in the clips (Clip “C”) on the splicing plane. Confirm the fibres do not exceed the minimum bend radius (Figure 16).

Step 5: Record splice information appropriately on the splice label and attach the splice plane cover (Figure 17).

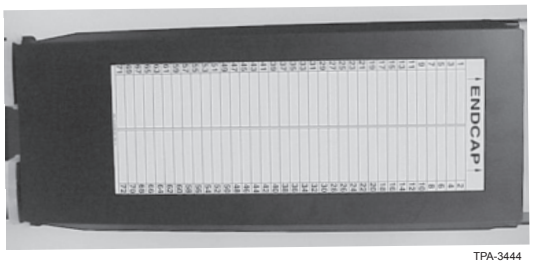

Figure 17

Step 6: Secure the plastic cover on the side compartment using the wing nuts as shown in Figure 18.

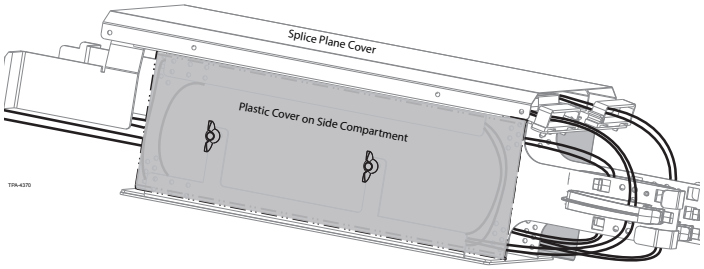

Figure 18

11. Seal the Closure

NOTE: Do not use encapsulant in SCF closures.

11.1 Install seal

Step 1: Slide the sealing ring down the cables to the end cap.

Step 2: Use the supplied brush to apply a third of the tube of UCN lubricant to the sealing ring channel on the end cap (Figure 19).

Step 3: Stretch the sealing ring over the channel in the end cap (Figure 20).

IMPORTANT: The installed sealing ring must be oriented as shown toward the inside of the closure.

Step 4: Fold the edge of the seal that overlaps the outside of the end cap until the seal seats in the channel as shown in Figure 20.

Step 5: Retain a small amount of lubricant for use later. Apply the remaining UCN lubricant to all sides of the sealing ring (Figure 20).

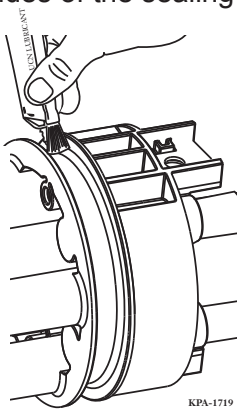

Figure 19

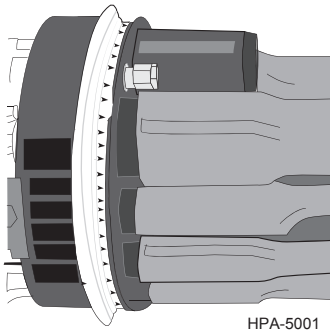

Figure 20

11.2 Install the canister cover.

Step 1: Slide the canister over the closure assembly (Figure 21).

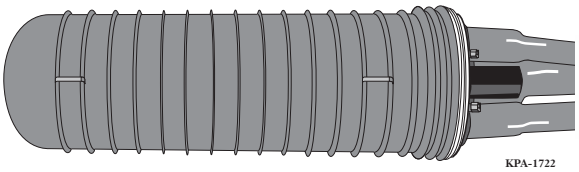

Figure 21

Step 2: Loosen bolt on the hinged side of the clamping ring.

Step 3: Apply a thin coat of UCN lubricant retained previously to the threads of the clamping ring latch bolts to prevent the bolts from seizing on reentry.

Step 4: Place the clamping ring over the flange of the canister and the sealing ring. Ensure that both the sealing ring and the canister flange are within the clamping ring (Figure 22).

Step 5: Swing the clamping ring into closing position. Tighten the bolts on the clamping ring until the plastic touches, then another quarter turn until the ring is completely closed (Figure 23).

IMPORTANT: A torque value of 3 to 5.5 N m should be sufficient. Do not use power tools to tighten the clamping ring; a torque value of more than 9 N m causes the hardware to crack and the clamping ring to become defective. If the clamping ring does not close properly, make sure the sealing ring and clamping ring are oriented correctly.

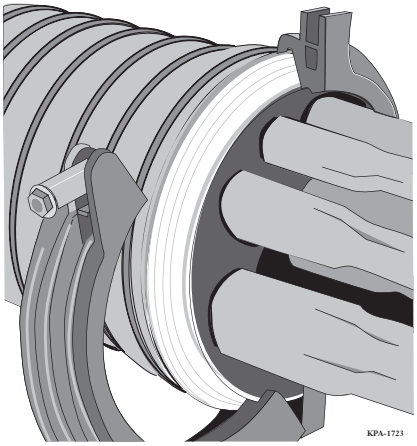

Figure 22

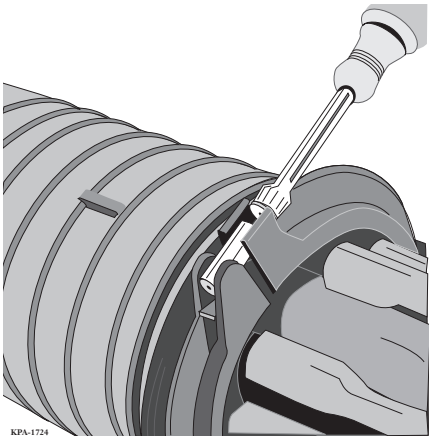

Figure 23

12. Perform a Flash Test

Step 1: Inject and maintain a pressure of 69 kpa of air into the closure using a hand pump (Figure 24). Check pressure regularly.

⚠	**WARNING:** To avoid a potentially hazardous situation that could result in death or serious injury, do not exceed 14 psi (100 kpa) gauge pressure. The closure could burst.

Step 2: Apply soapy water to the seal points and watch closure for signs of leakage (bubbling of soap).

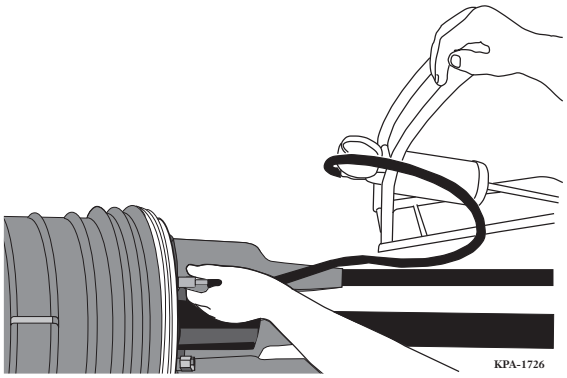

Figure 24

NOTE: A correctly sealed closure maintains pressure with no leaks.

Step 3: After the flash test has been performed and the closure sealed correctly, carefully remove the air valve and allow air to escape.

Corning Optical Communications Pty. Ltd • 74-84 Main Road • Clayton, Victoria 3168 Australia
+61 3 9538 2300 • FAX: +61 3 9538 2316 • www.corning.com/opcomm