CORNING

OptiSheath™ Sealed UCA Terminal—MFT/Patch Panel Versions

P/N 206-451-AEN
Issue 2

related literature | Search www.corning.com/opcomm. Click on "Resources."	
0504_NAFTA_AEN	Product Specification, OptiSheath® Sealed Terminal, UCA Series
206-339	Instruction, Wall-Pole-mounting Bracket for UCAO Closures
206-371	Instruction, Pressure Test Valve Kit
206-452	Instruction, OptiTap® Adapter Kit for Sealed UCA Terminal

Table of Contents

1. Carton Contents 2
2. Tools and Equipment Required 2
3. Removing the Terminal Cover (Optional) 3
4. Preparing the Cable 3
   4.1 Remove Cable Sheath 4
   4.2 Install Strain-relief Hardware 4
   4.3 Mark Cable 4
5. Installing Cable 5
   5.1 Apply Sealing Tape to Terminal 5
   5.2 Apply Sealing Paste and Tape to Cable 5
   5.3 Insert Cable into Terminal 6
   5.4 Install Dummy Plug(s) in Unused Ports 6
   5.5 Secure the Cable 7
6. Grounding Armored Cable, If Applicable 8
7. Storing Cable Slack in Base 9
8. Installing the Sealing Gasket 9
9. Splice Loose-tube Input Fibers to Pigtails 10
   9.1 Prepare Pigtail for Splicing 10
   9.2 Secure Buffer Tube and Pigtails to Tray 10
   9.3 Splice Fiber to Pigtail 11
   9.4 Secure Splice Tray 12
   9.5 Mate Pigtails in Adapter Panel 13
10. Installing Cable into Add-a-cable Port Adapters 14
11. Sealing the Terminal 14
   11.1 Verify Sealing Gasket Orientation is Correct 14
   11.2 Pressure Test the Terminal 15
12. Reentering the Terminal 15
13. Replacing or Adding Cables 16
14. Installing Additional Drop Cables 16

1. Carton Contents

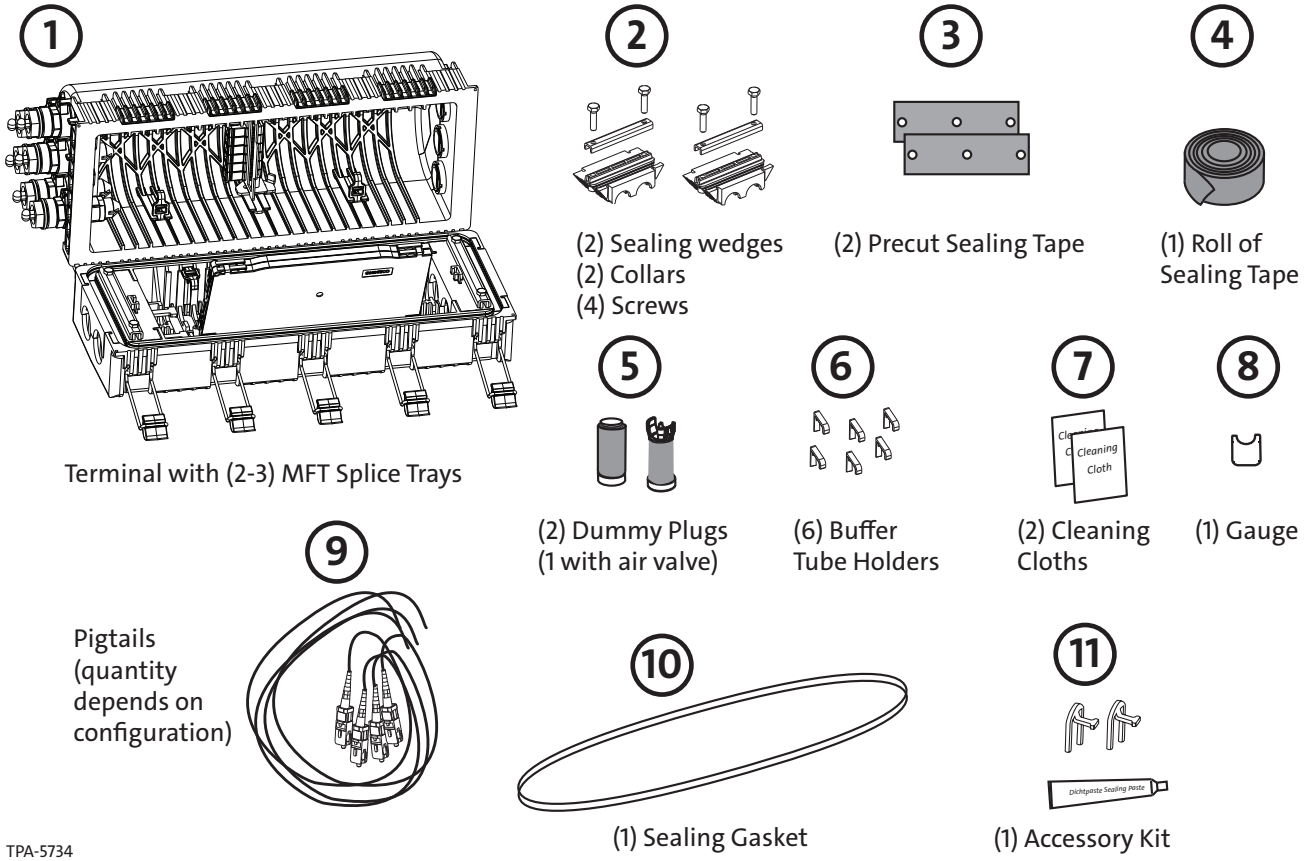

Figure 1

2. Tools and Equipment Required

The following tools and materials are required to complete this procedure:

- Tape measure
- Scissors
- Side cutters/diagonal cutters
- Cable or utility knife
- Flat-blade screwdriver
- 5/16-in nut driver
- Hand pump or regulated tank supply
- 3/8 -in socket and ratchet
- Marker
- Vinyl tape
- Plastic wrench, P/N UCA-KT-WRENCH (KIT, UCA, WRENCH), purchased separately
- Single-fiber heat-shrink splice protectors (P/N HSP-45S100-1) for a pack of 50 single-fiber, 40 mm protectors or P/N (HSP-60S100-1) for a pack of 50 single-fiber, 60 mm protectors), purchased separately
- Ground kit to ground armored cable, if applicable (purchased separately)

Corning recommends use of the following:

- Optical Fiber Access Tool (P/N OFT-000) to split the buffer tube in mid-span applications and access individual fibers in ALTOS® cable
- Ideal® Buffer Ring Cutter (P/N 100107-01) to split end-span buffer tubes
- Buffer Stripping Tool (P/N 3206001-01) to remove jacket from pigtail fibers
- BAND-IT®- type tool for mounting terminal to a pole
- OptiTap® Adapter Kit for Sealed UCA Terminal (P/N TKT-OPT-SCKT-50),

3. Removing the Terminal Cover (Optional)

IMPORTANT: *Although the cover can be removed, it is not recommended. Pigtail fiber routing is easier with the cover installed on the terminal. If the cover is removed, it must be reinstalled before routing fiber.*

Step 1: Open the latches on the cover using a flat-blade screwdriver (Figure 2A).

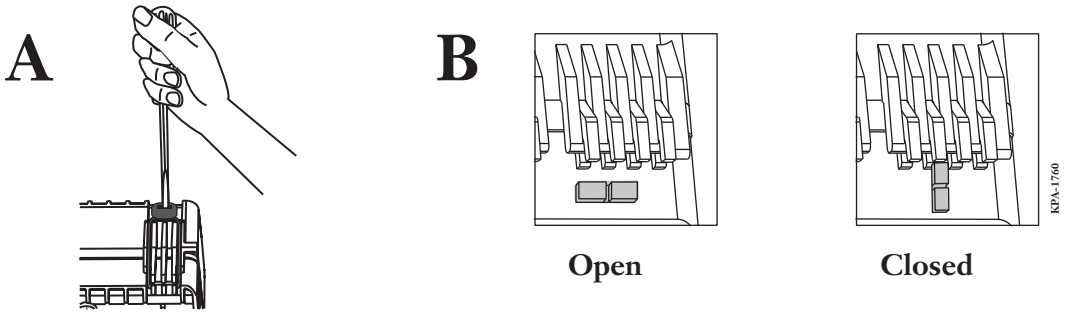

Figure 2

Step 2: Turn the terminal around with the hinges facing you. Rotate the retention locks at the rear of the terminal one-quarter turn to the open position (Figure 2B).

Step 3: Position the cover at a 90-degree angle from the base. Push down on the hinge pins until they are free of the hinges in the base. Pull the cover toward you and lift it away from the terminal (Figure 3).

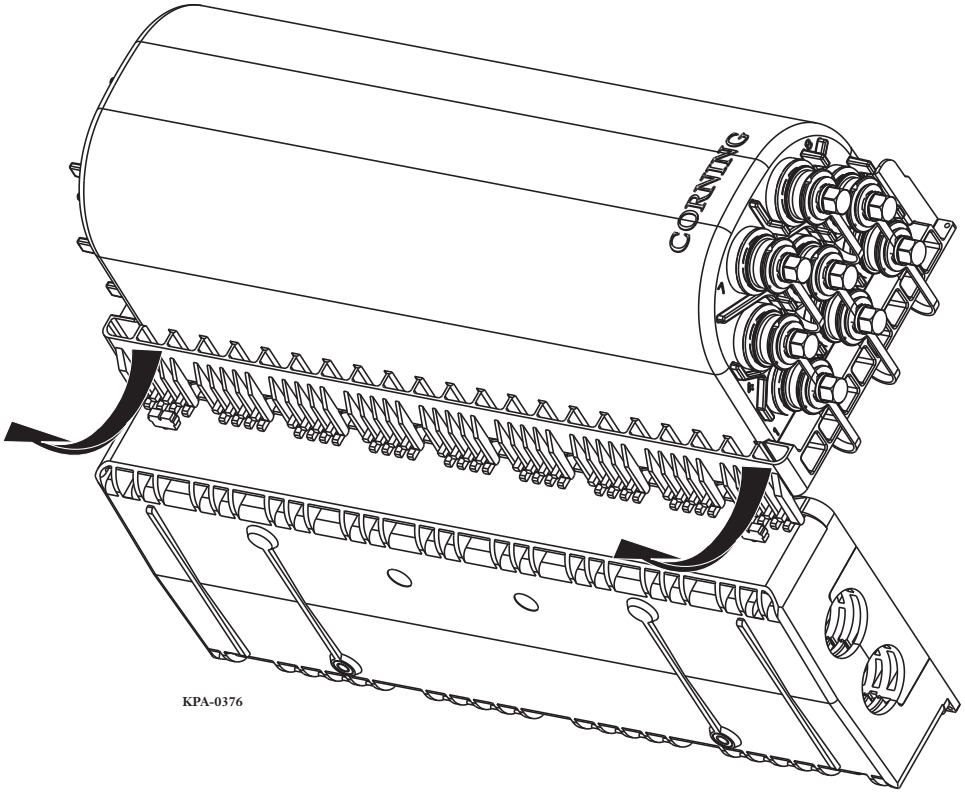

Figure 3

4. Preparing the Cable

CAUTION: Fiber optic cable is sensitive to excessive pulling, bending, and crushing forces. Consult the cable specification sheet for the cable you are installing. Do not bend the cable more sharply than the minimum recommended bend radius. Do not apply more pulling force to the cable than specified. Do not crush the cable or allow it to kink. Doing so may cause damage that can alter the transmission characteristics of the cable; the cable may have to be replaced.

CAUTION: Do not use power tools to perform this operation. Doing so may result in damage to the product.

4.1 Remove Cable Sheath

Remove the length of cable sheath and armor (where applicable) as indicated in Figure 4 for the appropriate installation application according to the manufacturer's directions for the cable type being installed.

IMPORTANT: *Typical lengths are illustrated. Since the actual application may vary, it is recommended to route the buffer tubes as they will lie in the terminal to determine actual strip lengths before cutting fibers.*

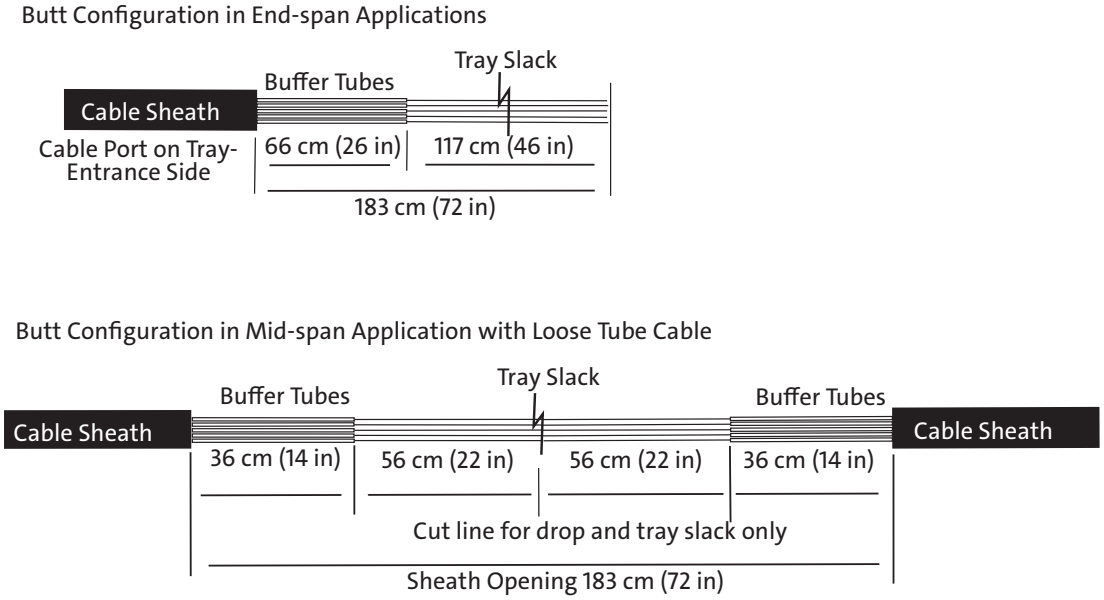

Figure 4

4.2 Install Strain-relief Hardware

Installation of strain-relief brackets prevents pistoning or bowing of central strength members, as well as cable sheath slipping or pullout. You will be required to strain-relieve the cables later in this procedure. When instructed to strain-relieve a cable, refer to this section for the directions on doing so.

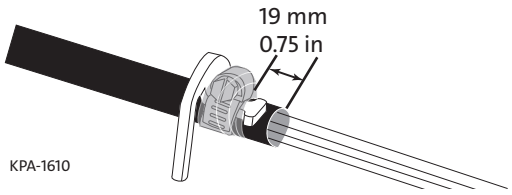

Figure 5

Step 1: Place a hose clamp over the cable 19 mm (0.75 in) from the end of the cable sheath in the notch of the bracket (Figure 5).

Step 2: Tighten the hose clamp in the notch on the bracket with the tensioning body on the hose clamp. Tighten hose clamp securely to a torque value of 30 in-lb. Wrap hose clamp and bonding hardware, if installed, with vinyl tape as shown in Figure 5.

Step 3: Repeat Steps 1 and 2 for the other side of the sheath opening or a second cable.

Step 4: Trim nonmetallic strength member flush with the top of the strain-relief bracket.

4.3 Mark Cable

Step 1: Temporarily install the cable into the terminal by sliding the strain-relief bracket into position.

Step 2: Mark the cable where the sealing tape will be wrapped around the cable (Figure 6).

Step 3: Remove cable from the terminal.

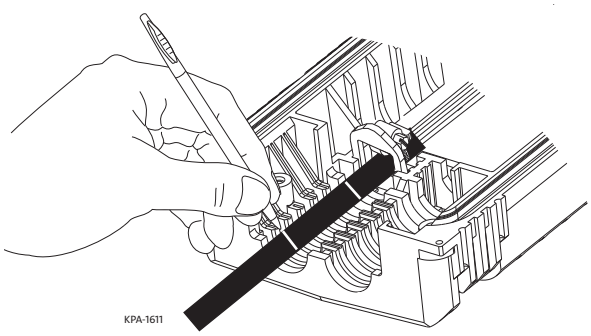

Figure 6

5. Installing Cable

5.1 Apply Sealing Tape to Terminal

Step 1: Remove the wax paper backing from the precut sealing tape.

Step 2: Align the center hole in the tape with the center hole in the terminal base and apply sealing tape (Figure 7). Make sure not to obstruct the holes for the sealing wedge screws.

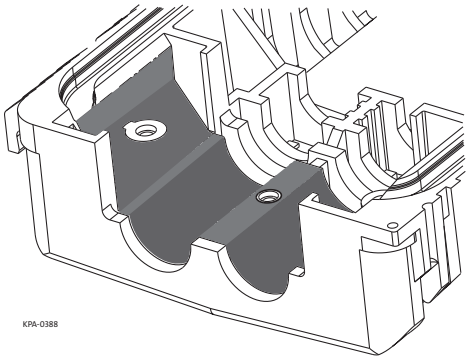

Figure 7

5.2 Apply Sealing Paste and Tape to Cable

CAUTION: Use sealing paste and cable cleaner in a well-ventilated area to eliminate the possibility of dizziness and nausea. If paste or cleaner comes in contact with skin or eyes, wash area immediately with soap and water to avoid irritation. Do not induce vomiting if paste or cleaner is ingested.

WARNING: Isopropyl alcohol is flammable with a flashpoint at 54°F. It can cause irritation to eyes on contact. In case of contact, flush eyes with water for at least 15 minutes. Inhalation of vapors irritates the respiratory tract. Exposure to high concentrations has a narcotic effect, producing symptoms of dizziness, drowsiness, headache, staggering, unconsciousness, and possibly death.

Step 1: Clean the cable sheath and remove scratches and cuts by lightly scraping the sheath with the back of a knife. Do not use emery paper.

Step 2: Clean the cable where the tape will be applied using the provided alcohol cleaning pad.

Step 3: Apply sealing paste "dichtpaste" to the cable. Use wax-paper backing from the sealing tape to spread the paste evenly around the cable in the area where the sealing tape will be applied (Figure 8). Wait for the sealing paste to dry.

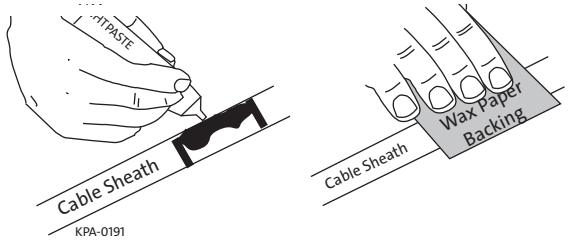

Figure 8

Step 4: Cut and pull the strip of sealing tape as shown in Figure 9. The tape will stretch and thin before it breaks.

Step 5: Apply sealing tape to the cable sheath in the marked area. Wrap the tape until it conforms to the diameter on the supplied gauge (Figure 10). Always finish with a complete wrap that overlaps the starting point by 13 mm (1/2 in).

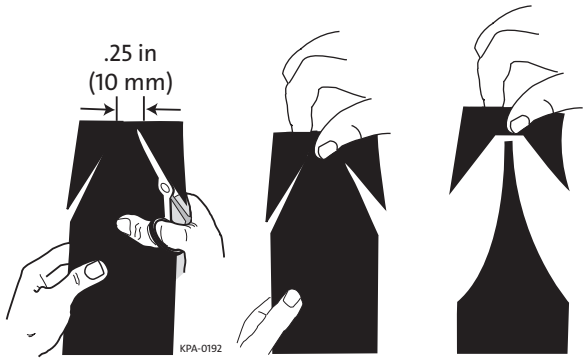

Figure 9

IMPORTANT: *Failure to wrap the tape to the gauge diameter or to overlap the tape as shown may cause the terminal to leak.*

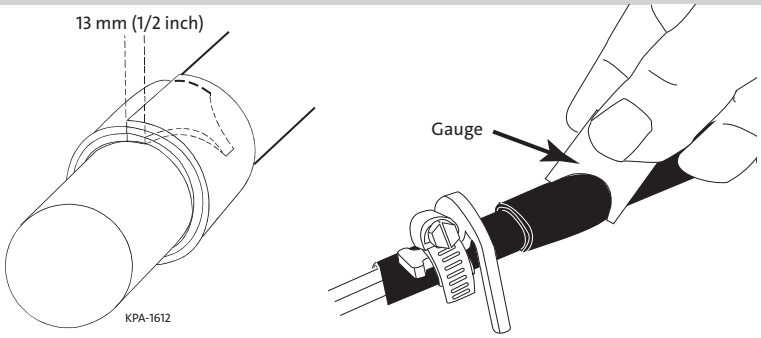

Figure 10

5.3 Insert Cable into Terminal

Insert the taped cable(s) into the lower half-shell (Figure 11).

IMPORTANT: *Do NOT use unapproved flat-profile cables. Install only ONE round or 0 flat-profile cable per port. Installing more than one cable (round or flat) per port (Figure 11) will create pathways for water to enter the terminal causing leaks.*

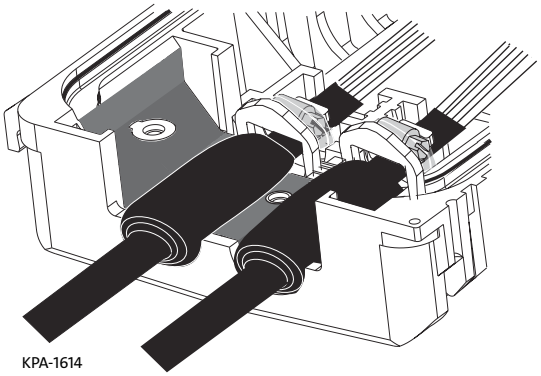

Figure 11

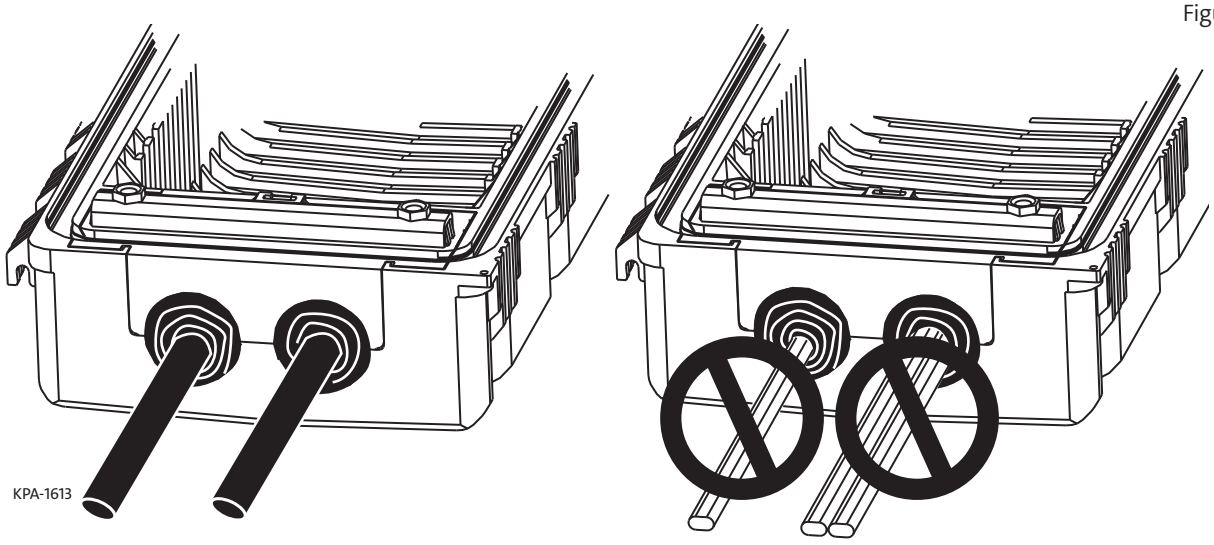

Figure 12

5.4 Install Dummy Plug(s) in Unused Ports

A kit (P/N UCA-KT-PLUG) may be ordered containing five additional plugs.

Step 1: Install a prewrapped dummy plug into one of the open ports with the closed end of the plug flush against the outside of the end cap (Figure 13).

Step 2: Install the prewrapped dummy plug with flash valve into the other open port.

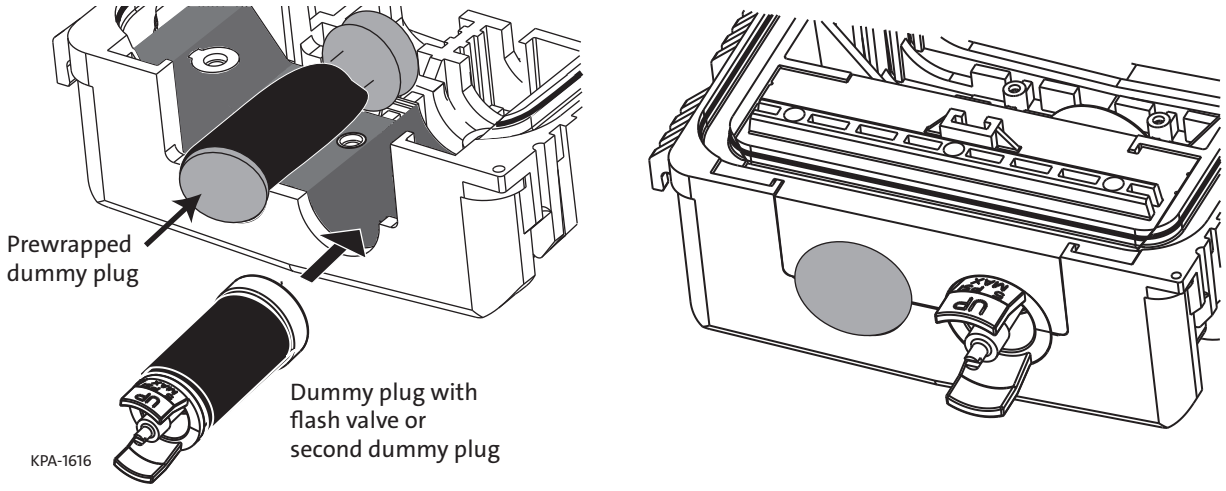

Figure 13

Step 3: If using an unwrapped dummy plug, follow the instructions in Section 3.2 to install sealing paste and tape on the plug. Use the gauge (Figure 14) to ensure there is enough tape applied to correctly seal the port.

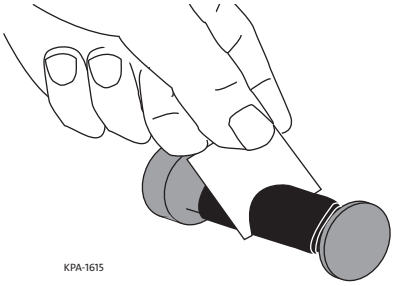

Figure 14

5.5 Secure the Cable

Step 1: Install the sealing wedge and bracket over the taped cable by alternately tightening the bolts until the wedge is closed (Figure 15)). The two surfaces inside the gasket channel must be flush to avoid leaks.

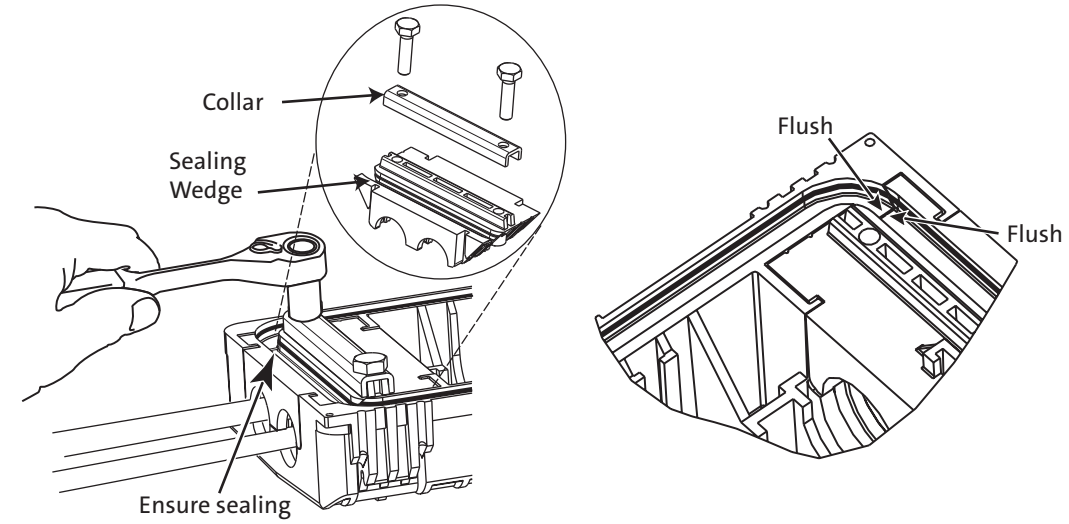

Figure 15

Step 2: Use a small screwdriver to press down the sealing tape in the gasket groove as shown in Figure 16A.

IMPORTANT: *Do not pull the tape to remove excess from the gasket groove. This will remove the tape below the gasket joint and cause leaks.*

Step 3: Spread this portion of the sealing tape over the joint of the base and the wedge as shown in Figure 16B. Remove any excess sealing tape from the rest of the joint area. Repeat for each of the four corners where the wedge and the base meet.

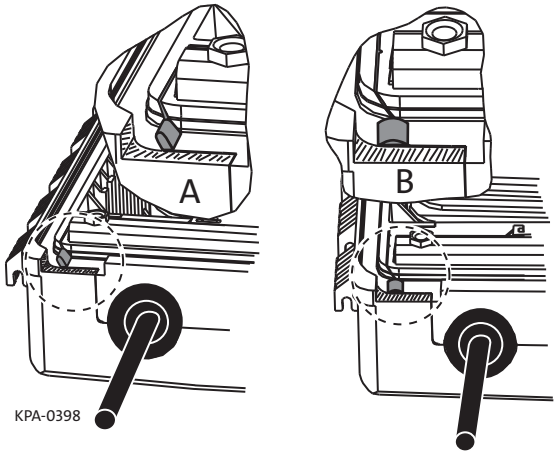

Figure 16

6. Grounding Armored Cable, If Applicable

If using armored cable, attach the loose end of the ground wire from the cable grounding hardware to either of the screws shown in Figure 17.

Ground wires are not provided. Additional grounding hardware may be purchased separately.

- P/N UCN-GNDCBL-20 contains twenty 8-in #6AWG ground leads
- P/N UCN-GND-SC20 contains twenty ground clamp assemblies

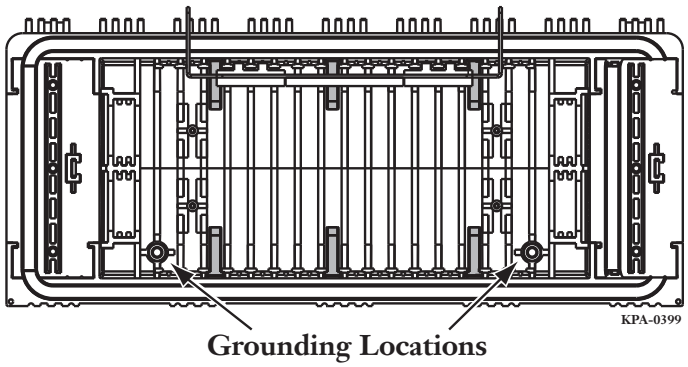

Figure 17

7. Storing Cable Slack in Base

Step 1: Slide the buffer tube holders into the terminal as shown in Figure 18. The holders can be installed into the slots inside the terminal or into either of the sealing wedges as needed.

Step 2: Loop the excess buffer tubes beneath the holders (strain-relief hardware not shown for clarity). Route loose-tube fibers in a loop.

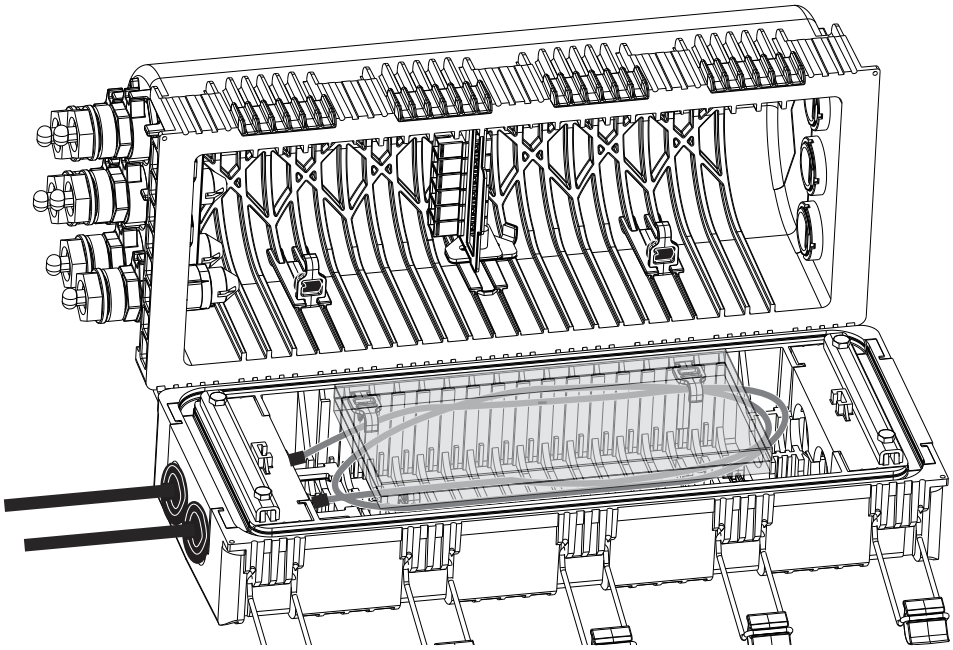

Figure 18

8. Installing the Sealing Gasket

IMPORTANT: *The gasket must be installed before splicing can be performed in the terminal.*

Clean the channel around the perimeter of the terminal base. Insert the sealing gasket into the lower half-shell with the channel on the gasket facing upward (Figure 19).

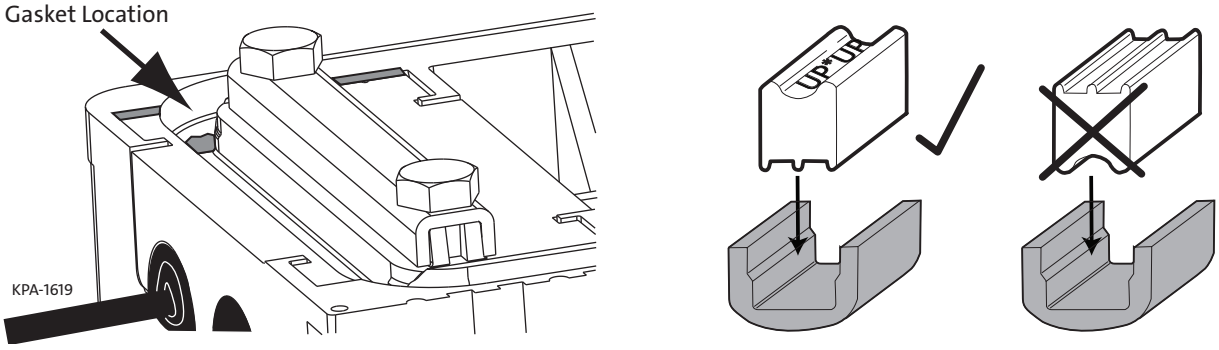

Figure 19

9. Splice Loose-tube Input Fibers to Pigtails

Before splicing fibers, determine the fiber routing configuration you will use in your splicing application. Buffer tubes may enter the splice tray and have all fibers in the buffer tube spliced at that time or stored in the tray for splicing later. It is also possible to splice one fiber from a buffer tube and express the remaining fibers out of the splice tray. Figure 20 illustrates the recommended routing inside the tray for the fibers being spliced and the express routing of the unused fibers.

9.1 Prepare Pigtail for Splicing

Step 1: Route two loops of pigtail around the inside perimeter of the splice tray (Figure 23).

IMPORTANT: *Typical lengths when using Corning UCAO splice trays are illustrated. Since the actual application may vary, it is recommended to route the pigtails as they will lie in the terminal to determine actual strip lengths before cutting fibers. Refer to "Managing Pigtail Fibers," if necessary.*

Step 2: Use the Buffer Stripping Tool (P/N 3206001-01) to remove the jacket from the pigtail according to the instructions provided with the tool.

Step 3: Remove the cut jacket to access the fiber (Figure 20).

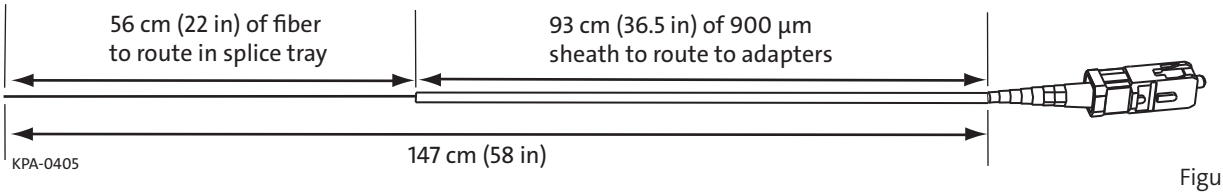

Figure 20

IMPORTANT: *Refer to the instruction manual for your splice equipment for detailed splicing instructions.*

9.2 Secure Buffer Tube and Pigtails to Tray

Step 1: Remove strain-relief for buffer tubes from the tray with a knife (Figure 21).

Step 2: Wrap buffer tubes with insulating tape for improved grip and place them in the tray.

Step 3: Latch strain-relief onto outer edge of tray over the buffer tube.

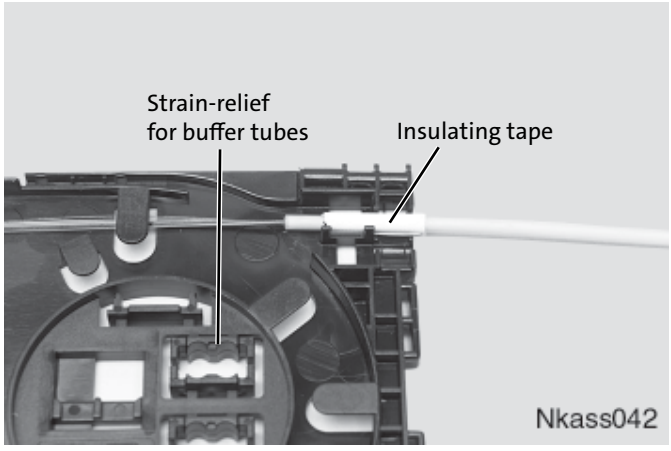

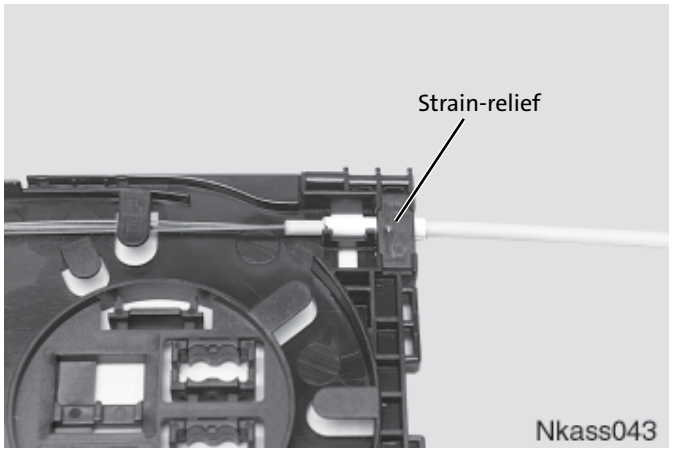

Figure 21

Step 4: Secure spiral wrap or buffer tube bundle wit cable ties..

NOTE: *The locking tooth of the cable tie must be placed within the MFT splice tray (as shown in Figure 22, so that it is possible to assemble and lock several splice trays without problems. The cable ties must be flush or below the upper edge of the MFT splice tray.*

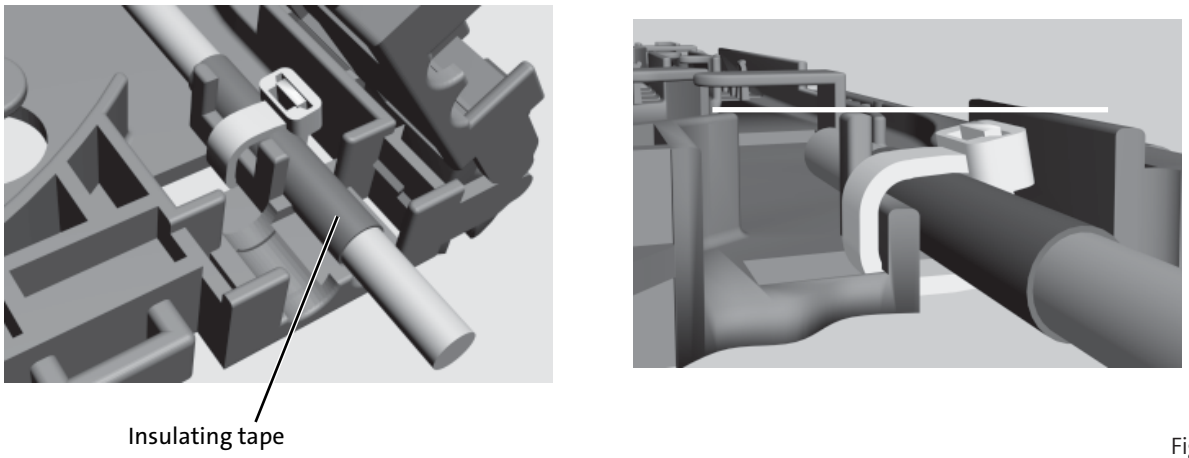

Figure 22

9.3 Splice Fiber to Pigtail

	WARNING: Never look directly into the end of a fiber that may be carrying laser light. Laser light can be invisible and can damage your eyes. Viewing it directly does not cause pain. The iris of the eye will not close involuntarily as when viewing a bright light. Consequently, serious damage to the retina of the eye is possible. Should accidental eye exposure to laser light be suspected, arrange for an eye examination immediately.

	WARNING: DO NOT use magnifiers in the presence of laser radiation. Diffused laser light can cause eye damage if focused with optical instruments. Should accidental eye exposure to laser light be suspected, arrange for an eye examination immediately.

Step 1: Separate the distribution buffer tube from the other buffer tubes.

Step 2: Bring prepared pigtail ends and cut buffer tube fibers to the splicing equipment.

Step 3: Slide a heat-shrink protection device onto each pigtail end to be spliced and move the heat-shrink device out of the way.

Step 4: Clean, cleave, and splice pigtail fibers to distribution fibers per instructions provided with the splicing equipment.

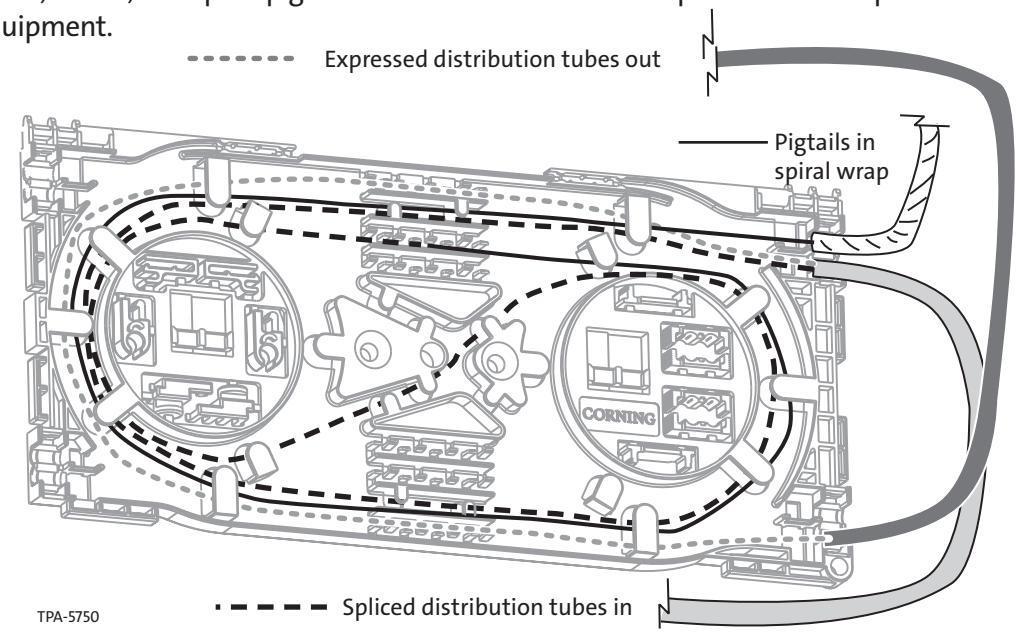

Figure 23

9.4 Secure Splice Tray

Step 1: Snap the cover onto the tray.

Step 2: Rotate the tray stacker up and place the splice tray in the stacker so cable tie holes in the tray are toward the right side of the terminal.

Step 3: Route distribution fibers around the inside perimeter of the storage area beneath the tray stacker and secure fibers beneath the buffer tube holders as needed (Figure 24).

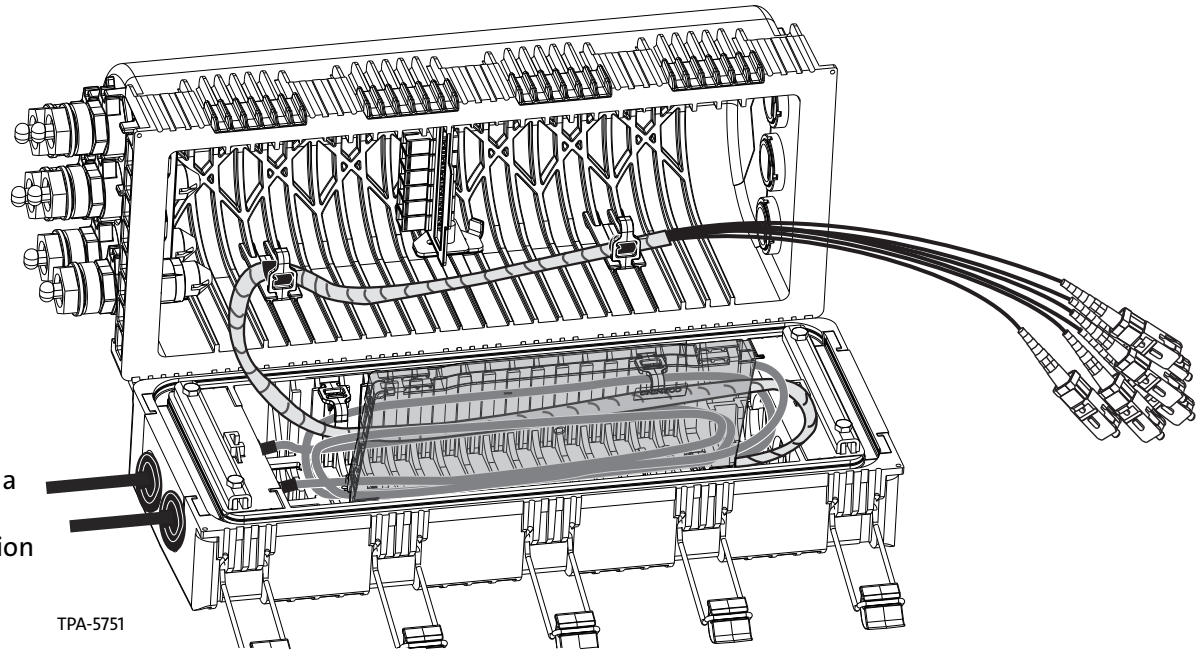

Routing in a butt-type configuration

TPA-5751

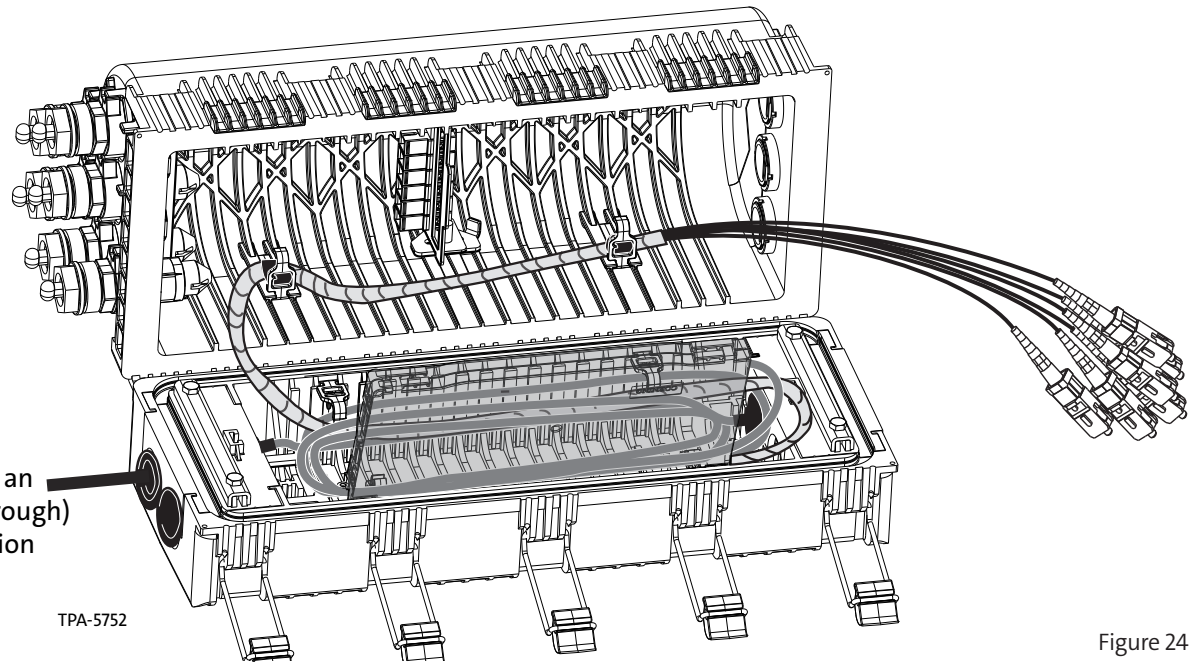

Routing in an in-line (through) configuration

TPA-5752

Figure 24

Step 4: Rotate the tray stacker down. Secure the tray(s) in the stacker with the hook-and-loop strap provided (Figure 29).

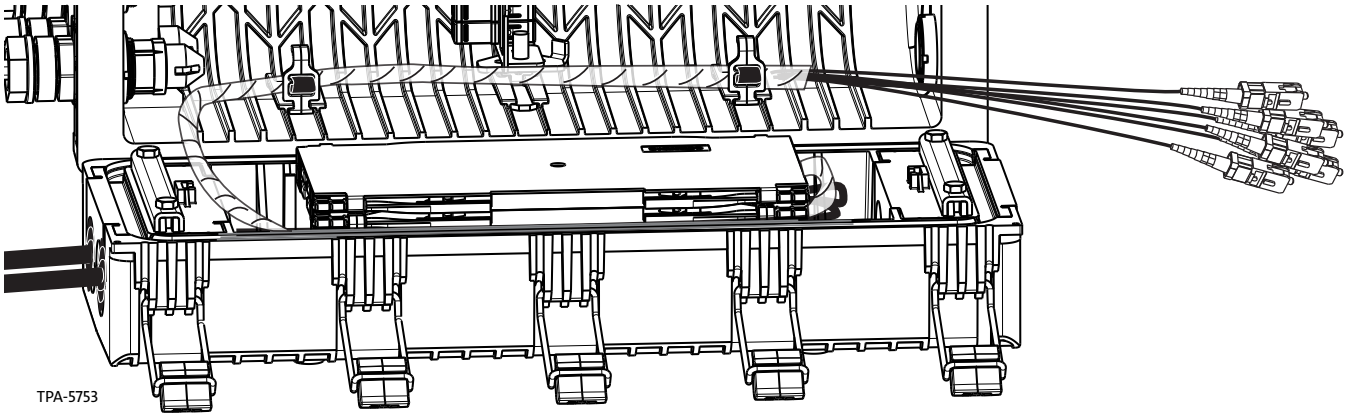

Figure 25

9.5 Mate Pigtails in Adapter Panel

Step 1: If terminal has been closed, open the terminal cover as described in the section "Reentering the Terminal."

Step 2: Route pigtail fibers from under the splice tray to the appropriate adapter on the right side of the adapter panel (Figure 30). Secure with the provided hook-and-loop straps.

Step 3: Inside the cover, remove the dust caps from the SC adapters in preparation for mating with the connectorized pigtails.

Step 4: Remove dust caps from the connectors. Clean adapters and connectors as needed, and mate in the appropriate adapter.

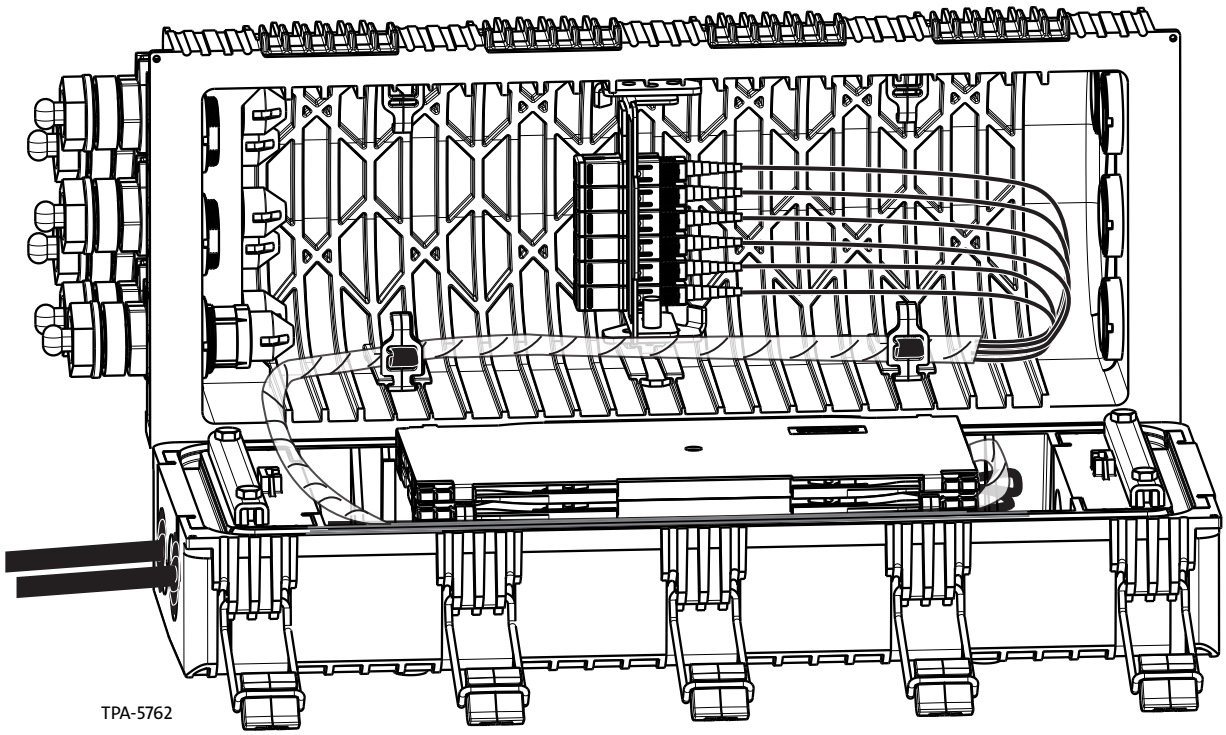

Figure 26

10. Installing Cable into Add-a-cable Port Adapters

Step 1: Starting with the port adapter "deepest" in the cover, use the plastic wrench (purchased separately) to loosen the bolt head on the outside of the desired port adapter (approximately two turns of the wrench) enough to allow you to remove the plastic plug from the center of the bolt head. Do NOT completely remove the bolt head. Discard the plug.

Step 2: Strip at least 51 cm (20 in) of cable sheath to expose the 900 µm fiber. Cut the strength members as close to the end of the jacket as possible, taking care not to nick the jacket.

Step 3: Insert the fiber and cable sheath into the port adapter until the edge of the jacket sheath is prevented from going any farther. Look through the viewing window on the adapter inside the terminal to ensure the jacket is seated against the adapter opening while the 900 µm fiber extends into the closure.

Step 4: Using the plastic wrench, tighten the bolt head on the outside of the port adapter until the spacer touches the add-a-cable adapter body.

Step 5: Field-connectorize the 900 µm fiber with an SC connecter per the instructions provided with the connector.

Step 6: Route fiber slack in a clockwise direction in the top of the terminal cover. Secure the fiber slack in the provided hook-and-loop straps (Figure 27) with spiral wrap around the fibers.

IMPORTANT: *Install cable into ports deepest in the cover first, working from back to front, i.e., 8 or 16.*

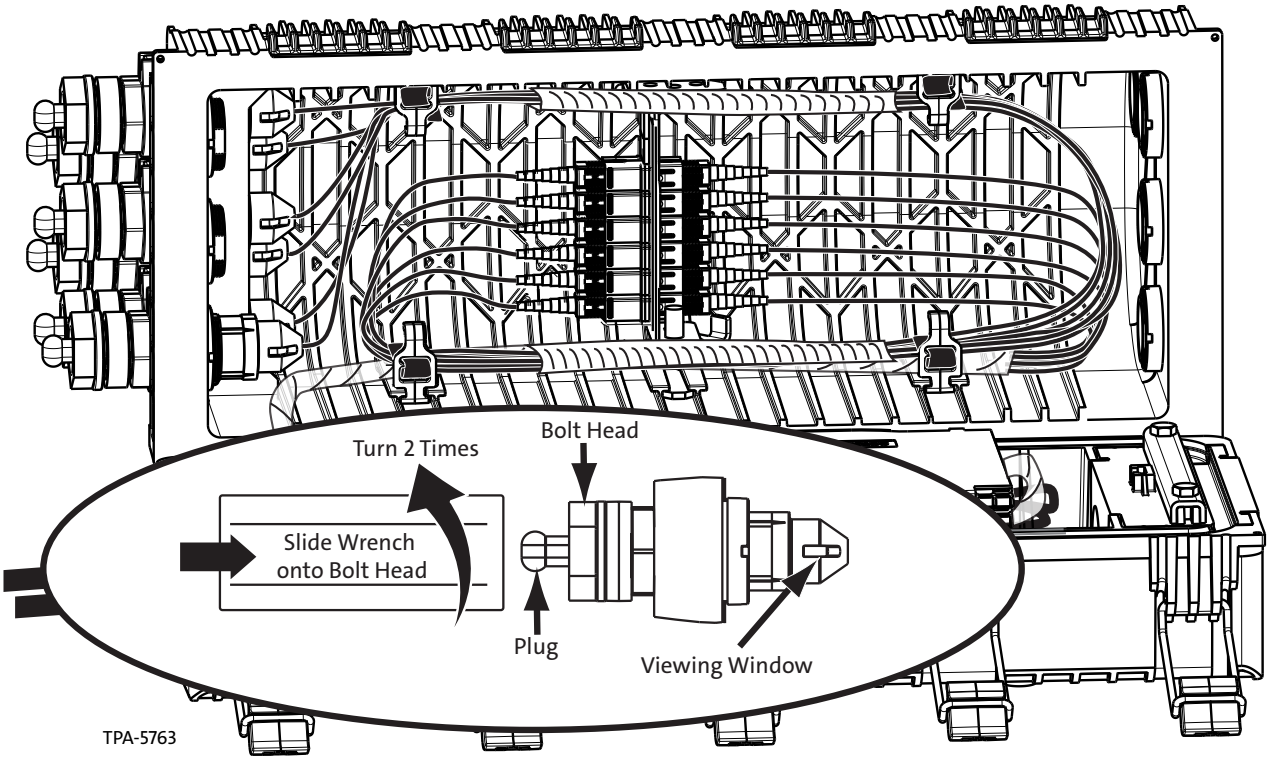

Figure 27

11. Sealing the Terminal

11.1 Verify Sealing Gasket Orientation is Correct

Make sure the gasket is installed into the lower half-shell with the channel on the gasket facing upward and the three ridges facing downward (Figure 28).

11.2 Pressure Test the Terminal

IMPORTANT: *Use P/N UCA-KT-FV-OP pressure test valve kit to pressure test the terminal after EACH cable installation.*

Step 1: Attach the hand pump or a regulated tank supply to the valve inside the dummy plug.

Step 2: Inject 5 psi of air into the terminal using a hand pump or a regulated tank supply (Figure 28). Check pressure regularly.

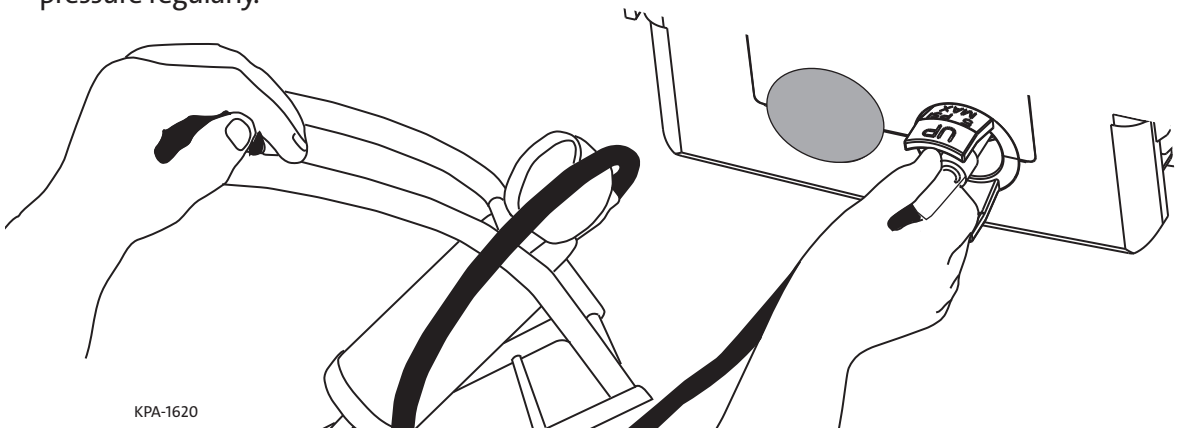

Figure 28

WARNING: To avoid a potentially hazardous situation that could result in death or serious injury, do not exceed 14 psi (100 kpa) gauge pressure. The closure could burst.

Step 3: Use a spray bottle to apply a soapy water solution to the key sealing areas, such as the sealing gasket, cable entries and dummy plugs. Watch the terminal for signs of leakage (soap bubbles).

IMPORTANT: *A correctly sealed terminal maintains pressure with no leaks. If obvious signs of leakage, such as a rapid pressure drop or an audible hissing sound are present, STOP and make any necessary corrections such as cleaning and repositioning the gasket, checking tightness on the wedge seals or resealing the cable/dummy plug sealing tape.*

Step 4: After the flash test has been performed and the terminal sealed correctly, carefully release pressure and allow air to escape.

12. Reentering the Terminal

To install add-a cable kits or replace existing cables or connectors:

Step 1: Reenter the terminal by placing a flat-blade screwdriver in the latches.

Step 2: Pry open as shown in Figure 29.

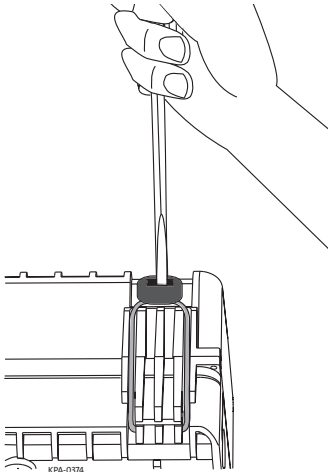

Figure 29

13. Replacing or Adding Cables

CAUTION: Do not use power tools to perform this operation. Doing so may result in damage to the product.

To add cables to the terminal, follow the instructions provided with the kit to prepare the cable for installation.

Step 1: Remove sealing gasket.

Step 2: Remove bolts holding the sealing wedge collar and remove the collar.

Step 3: Insert one of the bolts just removed into the center hole on the sealing wedge. Tighten screw slowly to force wedge out (Figure 30).

Step 4: Remove any pieces of sealing tape from the sealing wedge and lower half-shell.

Step 5: Install cable(s) as described in Sections 4, 5, and 10 of this procedure.

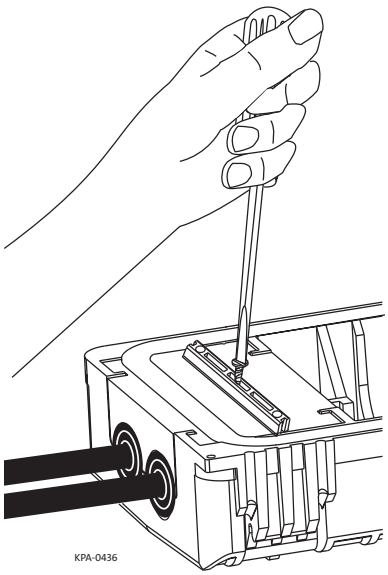

Figure 30

14. Installing Additional Drop Cables

Follow the instructions in SRP 206-452-AEN to install add-a-cable kits, then return to Section 10 of this procedure to complete the installation.

KITS:

- UCA-KT-EXT8/UCA-KT-EXT100/UCA-KT-EXT500
- UCA socket kit (P/N TKT-OPT-SCKT-50, 50 PK)
- Torque wrench with 1/4-in drive

Corning Optical Communications LLC • PO Box 489 • Hickory, NC 28603-0489 USA
800-743-2675 • FAX: 828-325-5060 • International: +1-828-901-5000 • www.corning.com/opcomm

Corning Optical Communications reserves the right to improve, enhance, and modify the features and specifications of Corning Optical Communications products without prior notification. A complete listing of the trademarks of Corning Optical Communications is available at www.corning.com/opcomm/trademarks. All other trademarks are the properties of their respective owners. Corning Optical Communications is ISO 9001 certified. © 2017 Corning Optical Communications. All rights reserved.