CORNING

Discovering Beyond Imagination

631-3511-200

MOXS™ Outdoor Cross-connect System

Compact Outdoor Cross-connect System

Installation, Testing and Servicing

Standard Release 03.00 June 2002

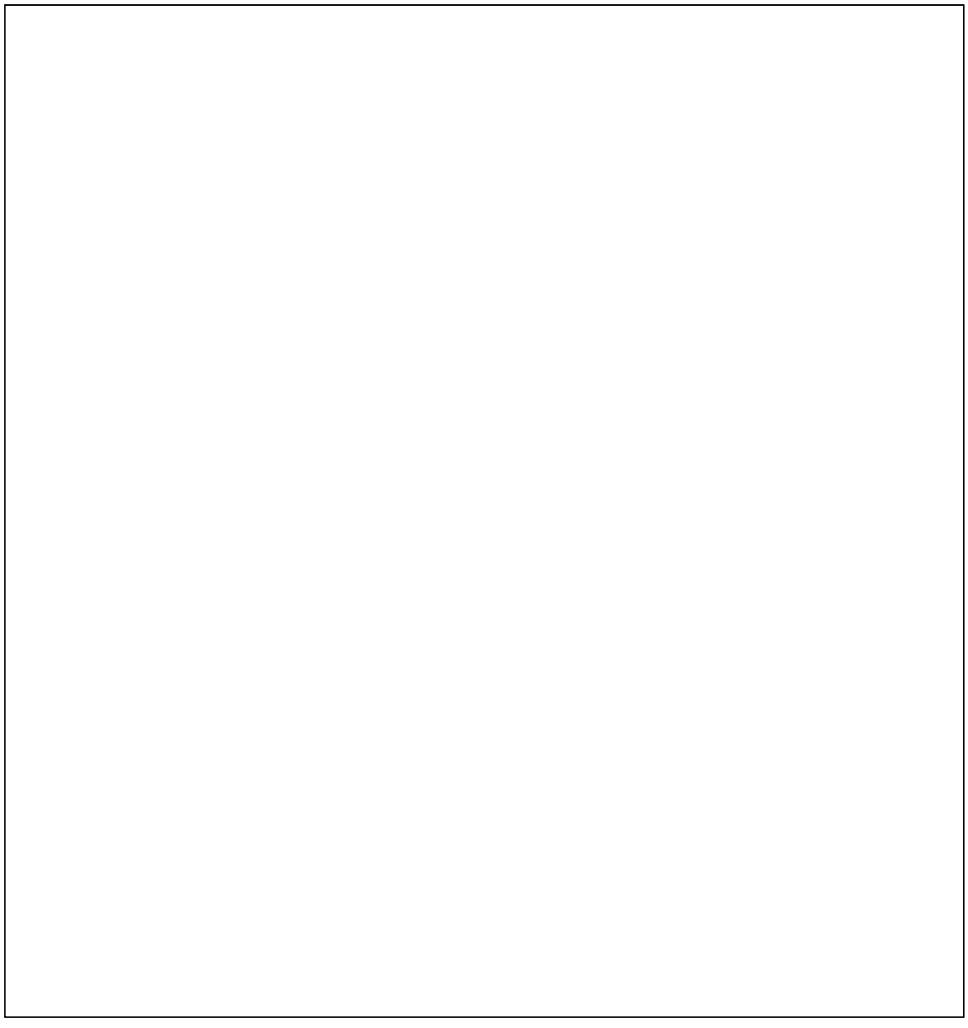

MOXS™ Outdoor Cross-connect System

Compact Outdoor Cross-connect System

Installation, Testing and Servicing

Publication number: 631-3511-200
Document status: Standard
Document release: 03.00
Date: June 2002

MOXS is a trademark of Corning Cable Systems LLC.
All other trademarks are the properties of their respective owners.

©1995, 1996, 2002 Corning Cable Systems LLC
All rights reserved

Corning Cable Systems reserves the right to improve, enhance, and modify the features and specifications of Siecor products without prior notification.

Revision history

June 2002
Standard, release 03.00

March 1996
Standard, release 02.00

August 1995
Standard, release 01.00

Table of contents

General 1-1

Installation of pad mounted compact interface cabinet 2-1

Installation of pole mounted compact interface cabinet 3-1

Installation of stake mounted compact interface cabinet 4-1

Cable termination 5-1
General 5-1
Use of TMOX16A connection tool 5-1

Cross-connection 6-1

Use of special service guard 7-1

Testing 8-1
Single-pair testing 8-1
25-pair testing 8-1

Servicing 9-1

Figures
Figure 5-1 TMOXs Connection tool 5-2
Figure 6-1 Cross-connection – multy-party service 6-4
Figure 6-2 Cross-connedtion – multy-party service, with bridge lifters 6-4
Figure 7-1 GMOXS23A special service guard 7-1

Charts
Chart 2-1 Installation of anchor assembly 2-1
Chart 2-2 Placing the cabinet on the pad 2-3
Chart 2-3 Cable placing and preparation 2-4
Chart 3-1 Placing the cabinet on the pole 3-1
Chart 3-2 Cable placing and preparation 3-2
Chart 4-1 Installation of cabinet 4-1
Chart 5-1 Terminating procedure 5-1
Chart 6-1 Typical cross-connect procedure (single and multi-party) 6-1
Chart 9-1 Connector and retainer replacement, without service interruption 9-1

General

This practice contains the installation procedures for the MOXS™ Compact Outdoor Cross-connect System. The procedures should be carried out in the order given in die following charts.

References

631-3511-100 MOXS Compact Outdoor Cross-connect System – Description

Installation of pad mounted compact interface cabinet

Chart 2-1
Installation of anchor assembly

This is a suggested procedure. Refer to local practices, where applicable, for further guidance. For specific details, refer to the appropriate structure practice and engineering work plan.

Step	Procedure
1	Locate and excavate hole. Place forms as required and level.
2	Place anchor assembly level with top of the form using temporary anchor leveling angles and shims as necessary.
3	install conduits (ducts) through anchor assembly to protrude 25 mm minimum to 40 mm maximum (1 to 1.5 in.) above anchor assembly
4	Pour concrete flush with top of anchor assembly and camber 7 mm (0.25 in.) away from anchor assembly. Remove excess concrete from top of anchor assembly, and remove temporary anchor leveling angles after the concrete has cured.

—continued—

Chart 2-1
Installation of anchor assembly (end)

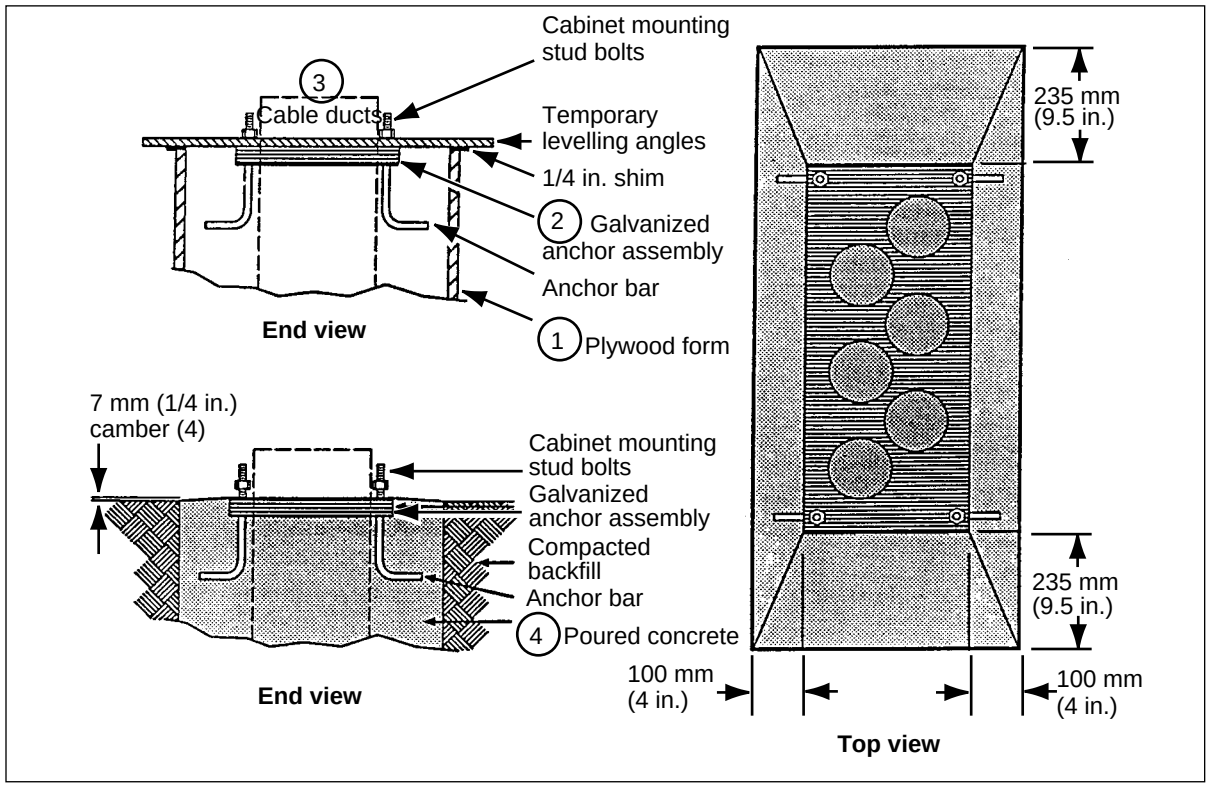

Chart 2-2
Placing the cabinet on the pad

CAUTION
Ensure the cabinet doors are closed and latched securely when placing the Cabinet.

Step	Procedure
1	Unlatch and open cabinet front door (left hand). Ensure slider arm engages to lock the door in the open position.
2	Remove security cover and front panel by loosening the nut from top ledge and inside the front panel.
3	Remove hardware from anchor assembly studs.
4	Place vapour barrier over anchor assembly studs.
5	Close door and place cabinet on vapour barrier and anchor assembly studs.
6	Replace anchor hardware in sequence shown below and tighten. A ratchet wrench, short extension and deep socket are suggested for this operation.
7	Replace and secure front panel and security cover.

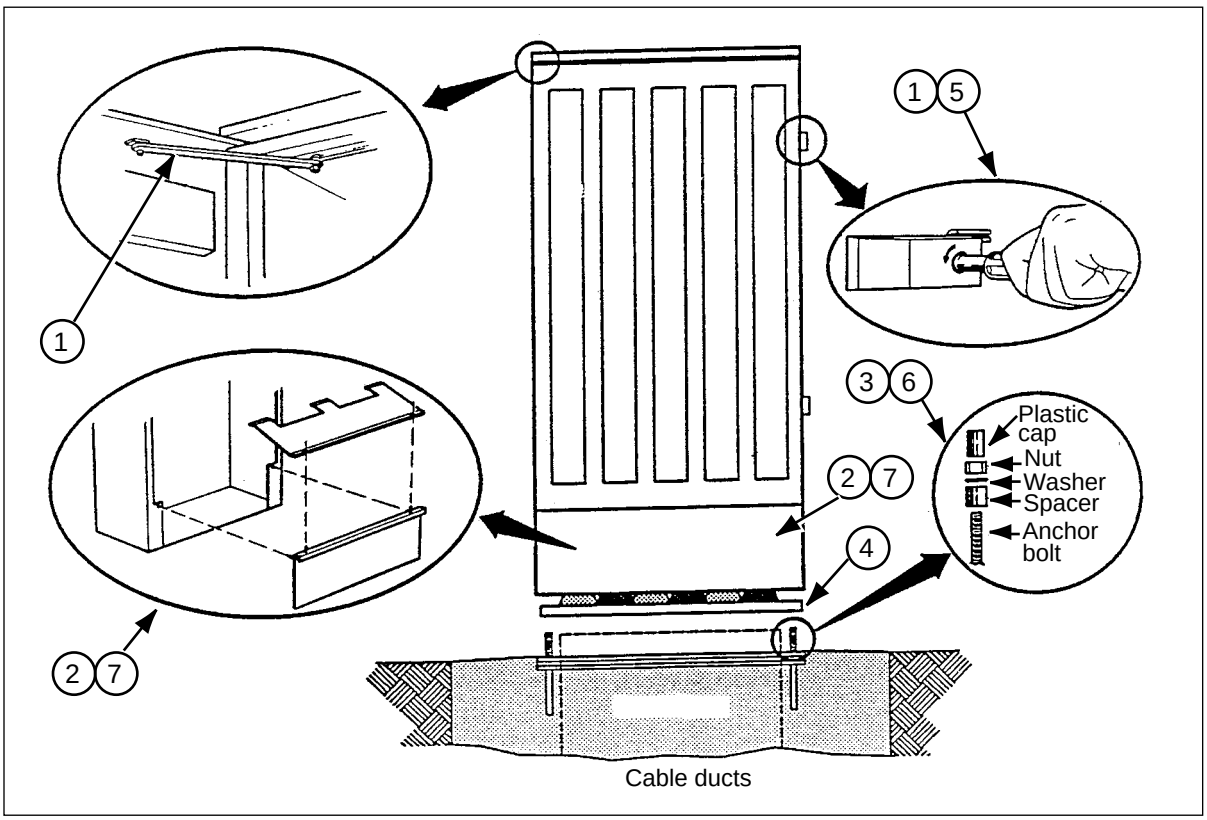

Chart 2-3
Cable placing and preparation

Nota 1: All cables must be placed as specified on the work plan. Ducts should be selected to minimize cable routing within the cabinet..

Note 2: Unused rubber boot(s) in vapour barrier must be sealed tight with tie-wrap.

Note 3: Quick clip pair count is normally top-to-bottom and left-to-right.

Step	Procedure

Placing

1 Remove tie-wrap from rubber boots selected for use. (If vapour barrier is installed.)

2 Place cable through rubber boot Leave slack for terminating.

For 965 mm (38 in.) Cabinet- leave 2 m (6 ft).
For 1587 mm (62.5 in.) Cabinet - leave 3 m (10 ft).

3 Using tie-wrap, secure and seal cable in rubber boot.

Preparation

4 Remove Sheath 75 mm (3 in.) above rubber boot Place bond clamp with stud facing the door opening (front and/or rear) of she cabinet.

5 Secure ground-wire lug to bond clamp.

6 Separate and tag binder groups.

7 Open front panel mounting column(s).

8 Route binder groups to appropriate column and feed through the distribution holes located on the front panel.

9 Organize and secure all binder groups with cable tie on the right-hand-inside of the column.

10 Close mounting column(s).

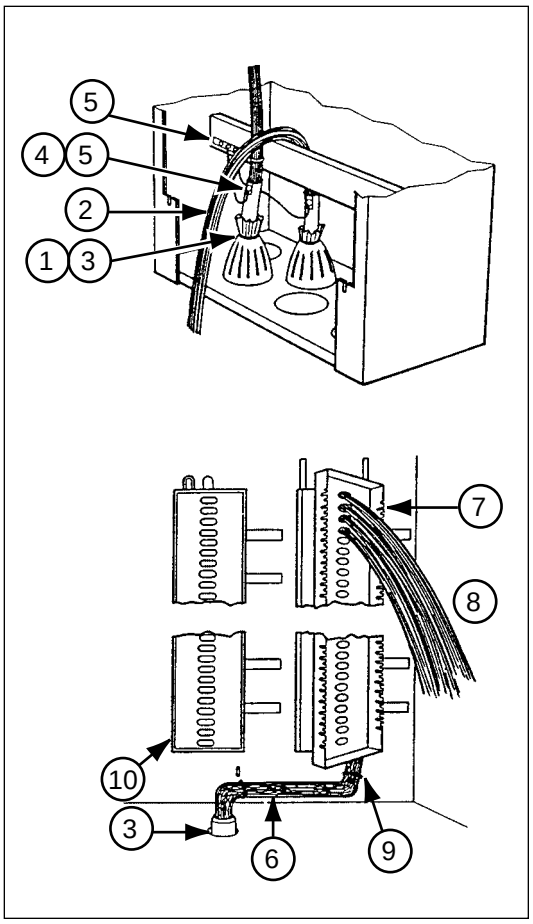

Installation of pole mounted compact interface cabinet

Chart 3-1
Placing the cabinet on the pole

Before proceeding with a below-strand installation, refer to balcony installation practices for detail and clearances. Unless otherwise specified, place the cabinet on the face and splice side of the pole in the sequence shown.

CAUTION
Ensure the cabinet doors are closed & securely latched prior to hoisting.

Step	Procedure
1	Mark location of through bolt.
2	Drill 5/8 in. diameter hole.
3	Attach upper mourning bracket using l/2 in Bolt & Nut. (Bracket must be level.)
4	Attach lower mounting bracket to bottom of cabinet. (Use slotted hole on bracket.)
5	Hoist cabinet (with doors closed) by safety hand rail, and suspend from upper bracket.
6	Secure lower bracket to pole with 1/2 by 4-1/2 in. lag screw.
7	Adjust vertical alignment of cabinet. Tighten lower mooning bracket bolts.
8	Below Strand Installation Only: Install balcony 250 mm (10 in.) below bottom of cabinet: Use small balcony for 300, 600, 750 & 900 pair cabinet. Use large balcony for 1200, 1500, & 1800 pair cabinet.

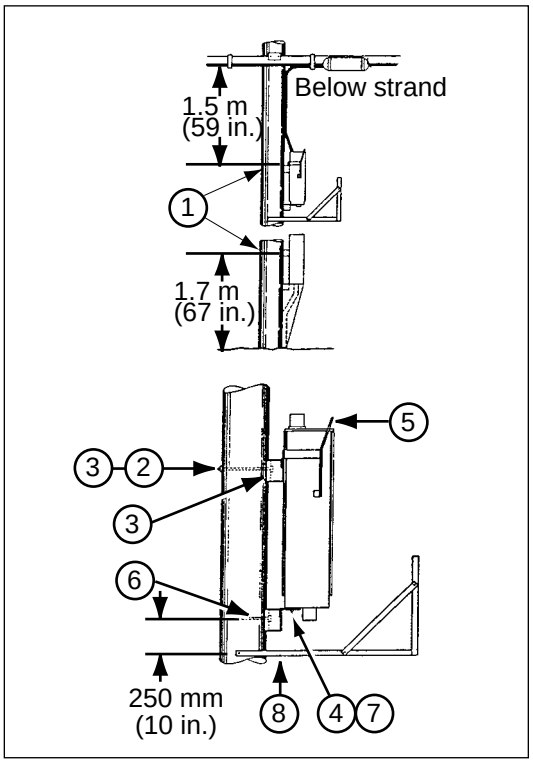

Chart 3-2
Cable placing and preparation

CAUTION
Secure saftey strap to handrail when working from balcony.

Nota 1: All cables must be placed as specified on the work plan.

Note 2: Do not remove plugs from unused ports.

Step **Procedure**

Placing

1 Place cable on pole. Leave slack for terminating:

300 pair cabinet-2.0 m (6.5 ft)
600, 750, 900, 1200, 1500, &
1800-pair cabinet-3.3 m (11 ft)

Preparation

2 Unlatch door and ensure the slider arm locks the door in the open position.

3 Remove caps from selected ports.

4 Cut a suintable diameter heat shrink tubing, 30 mm (12 in.) - long. Diameter of tubing to suit port & cable-diameter. PuIl tubing on cable sheath before is removed.

5 Mark sheath 157 mm (6 in.) above bottom of cabinet for top or bottom entry cables and remove sheath.

6 Place bottom cable through entry ports as work plans. Place top-entry cable through port at rear of column, loop cable toward the front at the bottom of cabinet and secure cable with tie-wrap to bottom horizontal bar.

7 Place bond clamp on cable sheath, with stud facing front of cabinet.

8 Follow cable placing sequence given in Chart 2 -3 steps 5 through 10.

9 Secure cable inside the cabinet and on the pole. Tape all cables to port by using “B” sealing (or equivalent) and vinyl tape to build up a tapered preseal.

10 Position heat-shrinkable tubing on port & taped section of cable and shrink tubing on securely by a torch flame

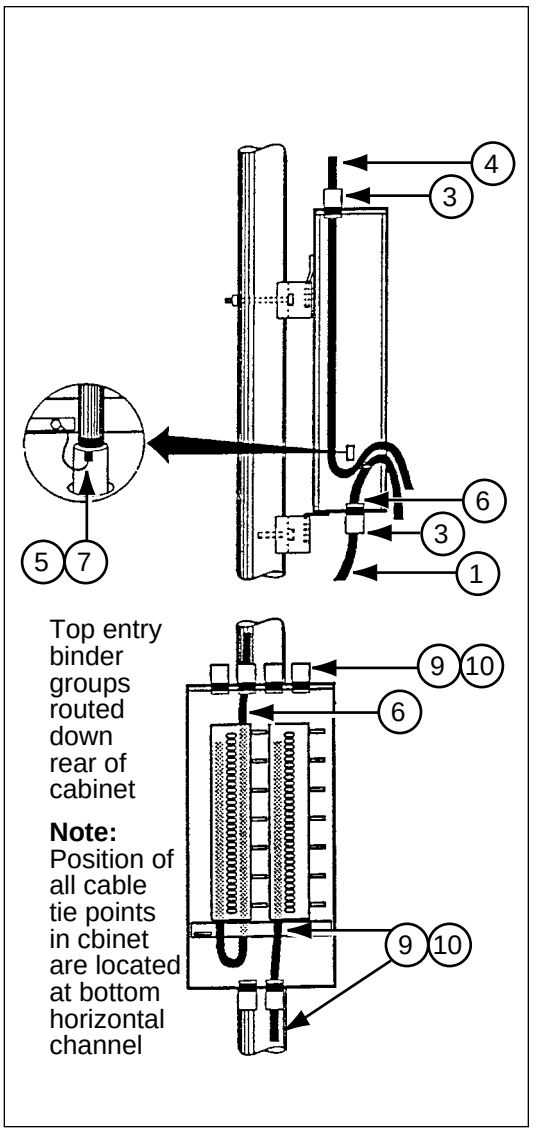

Installation of stake mounted compact interface cabinet

Chart 4-1
Installation of cabinet

Step	Procedure
1	Locate and excavate hole.
2	Insert stake mount and level with final grade. Stakes are to be placed final grade. Stakes are to be placed towards the front (left hand door side) of the cabinet.
3	Bachfill hole and tamp.
4	Place cabinet as shown in Chart 2-2.

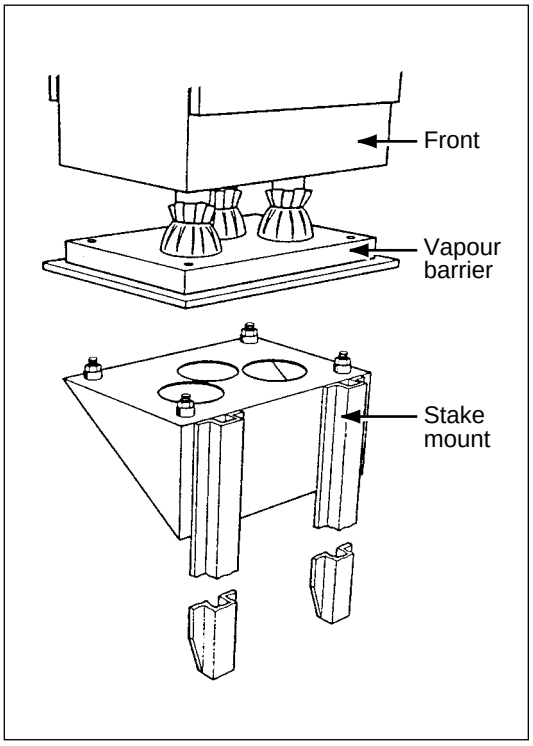

Cable termination

General

The MOXS compact outdoor cross-connect system is designed for use with 0.63, 0.5, and 0.4 mm diameter (22, 24 and 26 AWG) conductors. Conductors 0.9 mm (19 AWG) in diameter must be spliced to QCBE-type connector modules prewired with 0.5 mm diameter (24 AWG) conductors.

The terminating procedure is normally carried out working from the top of the mounting column to the bottom. **It is more convenient, when terminating, to place the Terminating Fixture in the position below that of the connector being terminated.**

Use of TMOXS16A connection tool

The TMOXS16A connection tool (Figure 5-1) terminates wires on the QCBE-type connectors. The button in the handle of the tool selects either the CUT or the NO-CUT position. In the CUT position the tool inserts the wire in the connector and cuts off the excess wire. In the NO CUT position the tool inserts the wire into the connector only. The NO-CUT position is used when looping wire to another location.

The cutting side of the tool is identified by the black blade. In the CUT position, the tool is used with the black blade pointing towards the wire-ends to be cut off. Care must be talken at all times to avoid damage to the tool which should be kept in the leather pouch when not in use. A damaged tool must be replaced.

Use of Tool in CUT position:

1 Set to CUT.

2 Hold the tool with the black blade towards the wires to be cut off.

3 Insert the tool in the connector with the tool at right angles to, and level with, the connector.

4 Push the tool fully forward to seat the wire in the connector.

Note: The wire will not be properly inserted unless the tool is pushed fully forward and bottomed. The click made by the tool does not necessarily indicate that the wire has been corectly inserted.

5 Release forward pressure, and note that cutting action takes place.

Use of Tool in NO-CUT position:

1 Set to NO-CUT.

2 Insert the tool in the connector with the tool at right angles to, and level with the connector.

3 Push the tool fully forward to seat the wire in the connector.

Note: The wire will not be properly inserted unless the tool is pushed fully forward and bottomed. The tool does not click in the NO- CUT position.

4 Release forward pressure, and remove the tool from the connector.

Figure 5-1
TMOXS connection tool

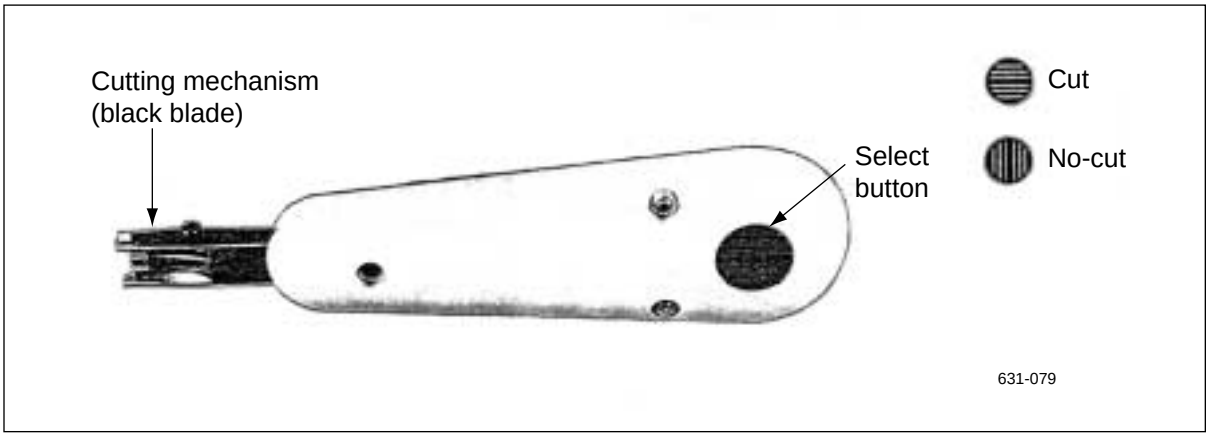

Chart 5-1
Terminating procedure

Note: Check that the retainers and the QCBE-type outdoor connectors are as specified on the local work plans.

Step	Procedure
1	Latch fixture in retaining slots on mounting column.
2	Snap connector to fixture head.
3	Fan wire pairs between posts and color coded wire guides and into connector.
4	Terminate wires with TMOXS16A Tool. (Black blade down) ***Note:*** Wire tails should not be bent backwards prior to terminating.

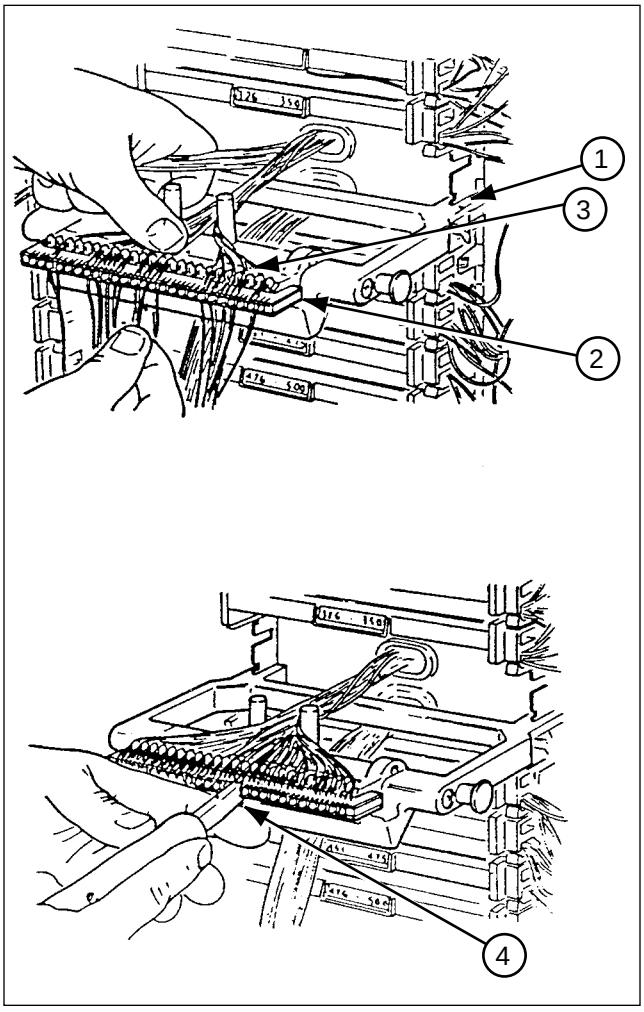

—continued—

Chart 5-1
Terminating procedure (continued)

Step	Procedure
5	Place retainers on connector(cover side down). Push to lock. ***Note:*** Ensure the cover is in the fully open position when inserting.
6	Release head by pulling out release button and rotate 90°.
7	Dress all wires against retainer end the strain relief channel, and pull up into tie point. Secure wire bundle with cable tie (5-1/2 or 7-1/4 in. ties are recommended) using long nosed pliers or splicer's scissors.

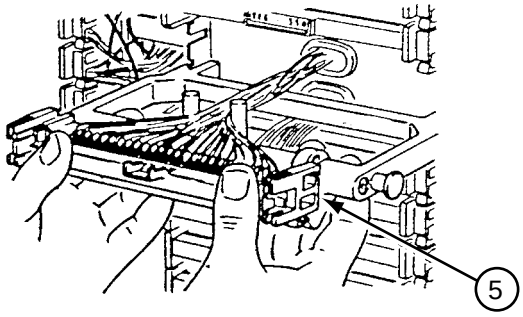

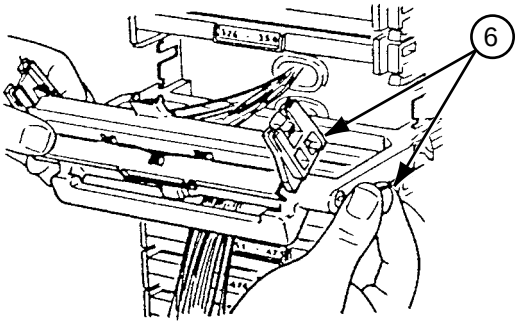

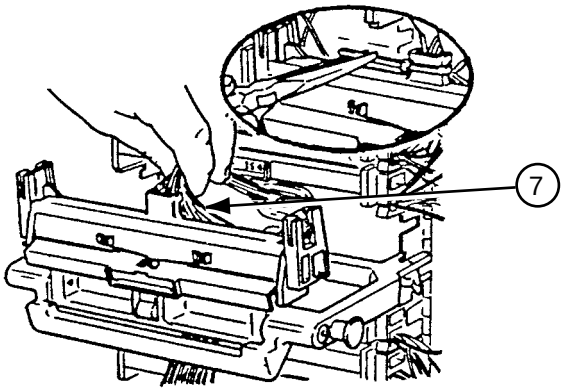

—continued—

Chart 5-1
Terminating procedure (end)

Step	Procedure
8	Push retainer release latch and remove the connector/retainer assembly from the fixture.
9	Snap the retainer into the mounting column. Close the retainer cover.
10	Remove the fixture and place it into the next lower position on the mounting column. Repeat steps 1 through 10 for all binder groups.
11	Attach designation labels on retainer covers according to the count on the work plan.

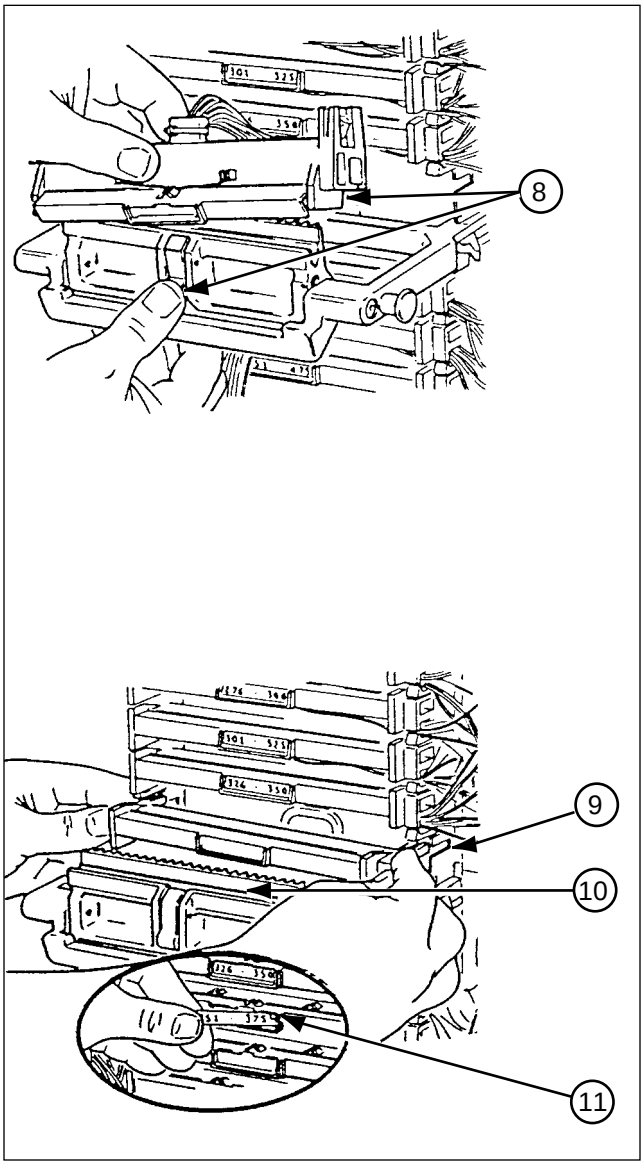

Cross-connection

Chart 6-1
Typical cross-connection procedure (single and multi-party)

Terminate the cross-connect wires as shown below.

> ***Note:*** All cross-connection must be referenced to the cross-connect list (or service order). Use 24 AWG-type jumper wire. Close retainer covers after terminating jumpers.

Figure 6-1
Single-acess, double-column routing

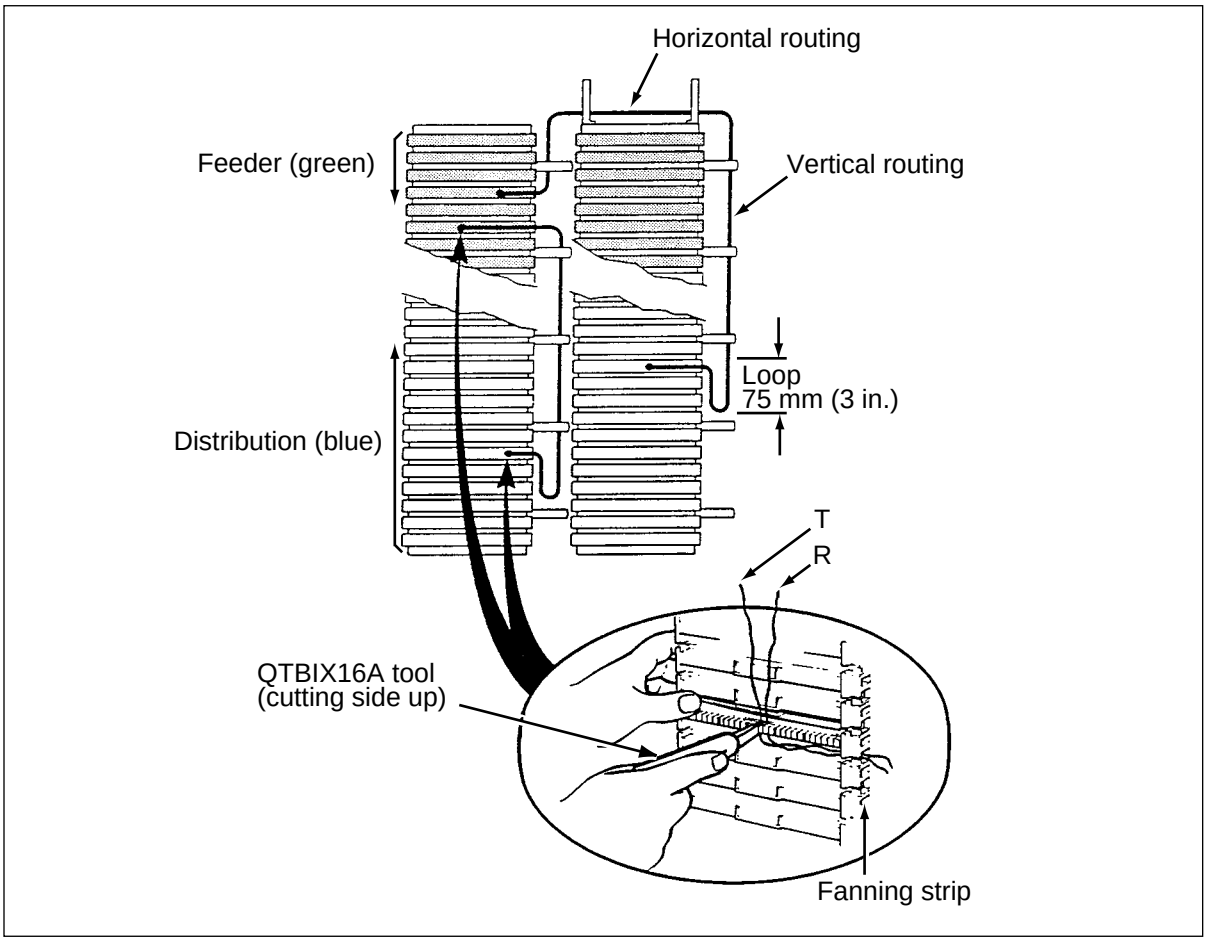

Figure 6-2
Single-access cabinet, single column routing

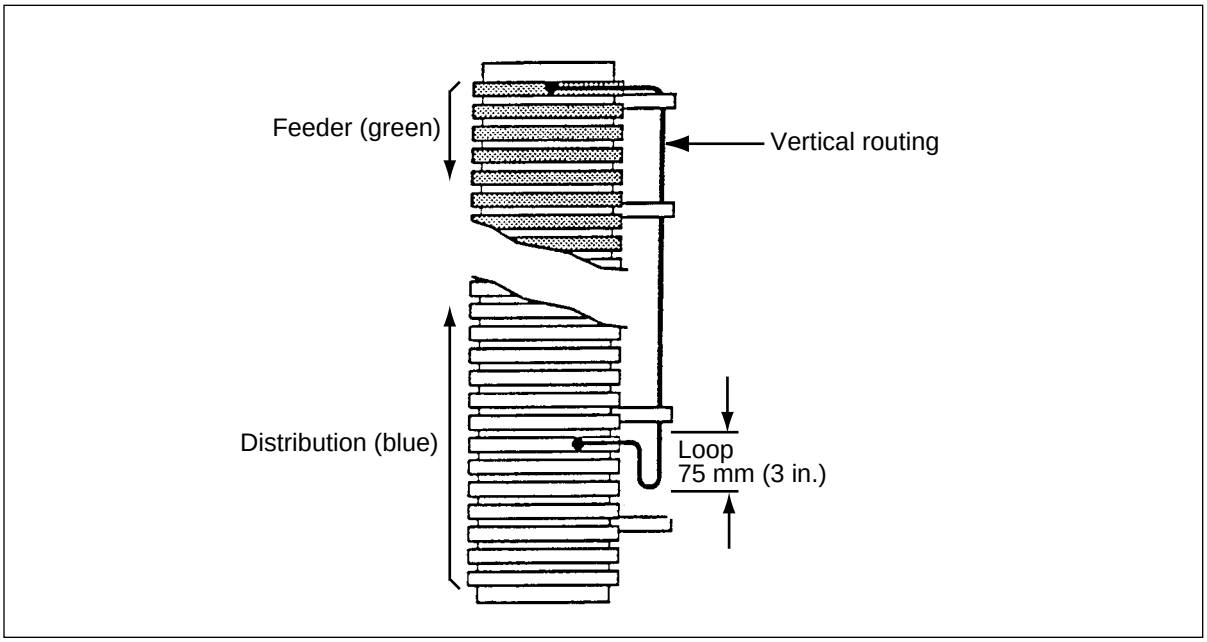

Figure 6-3
Double-access cabinet, double column routing

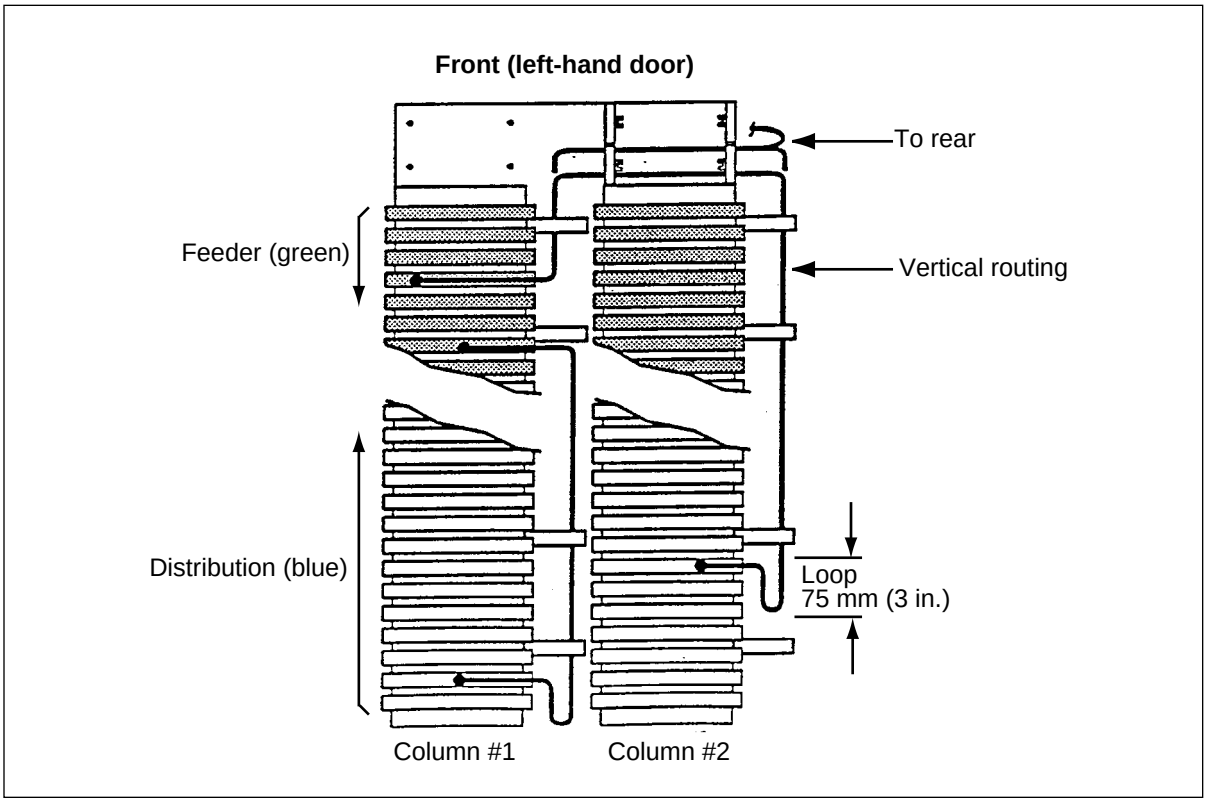

Figure 6-4
Double-access cabinet, double column routing

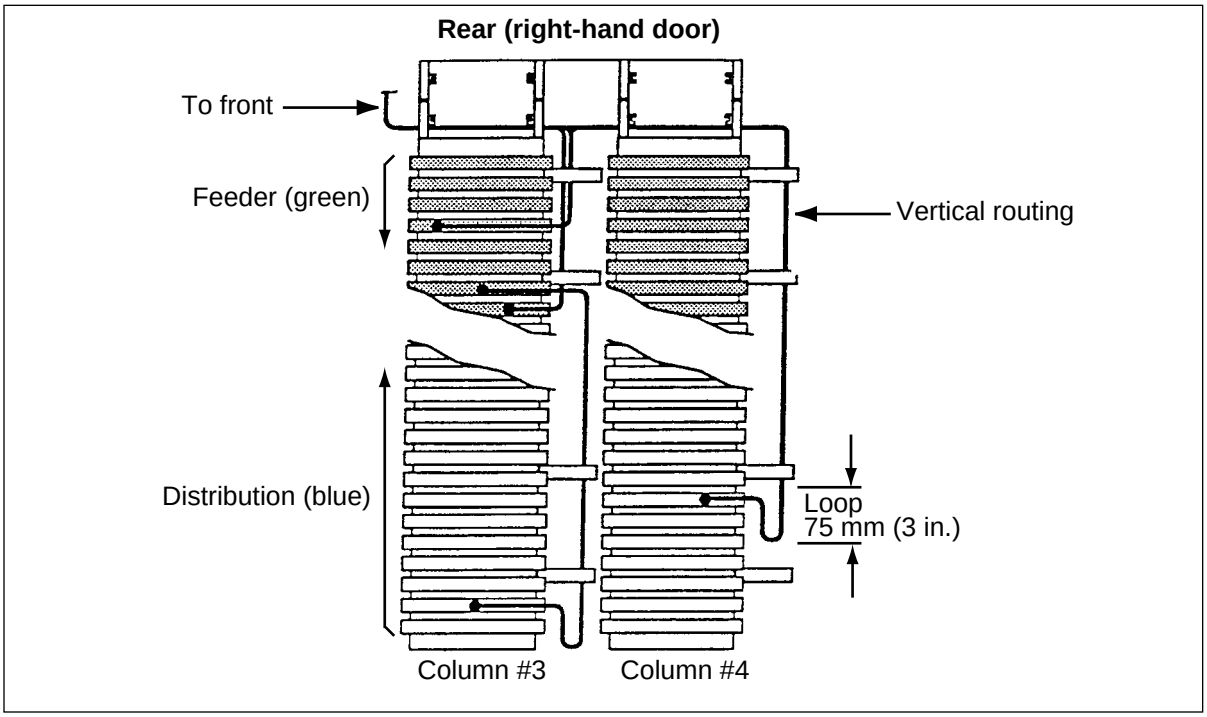

Figure 6-5
Double-access cabinet, single column routing

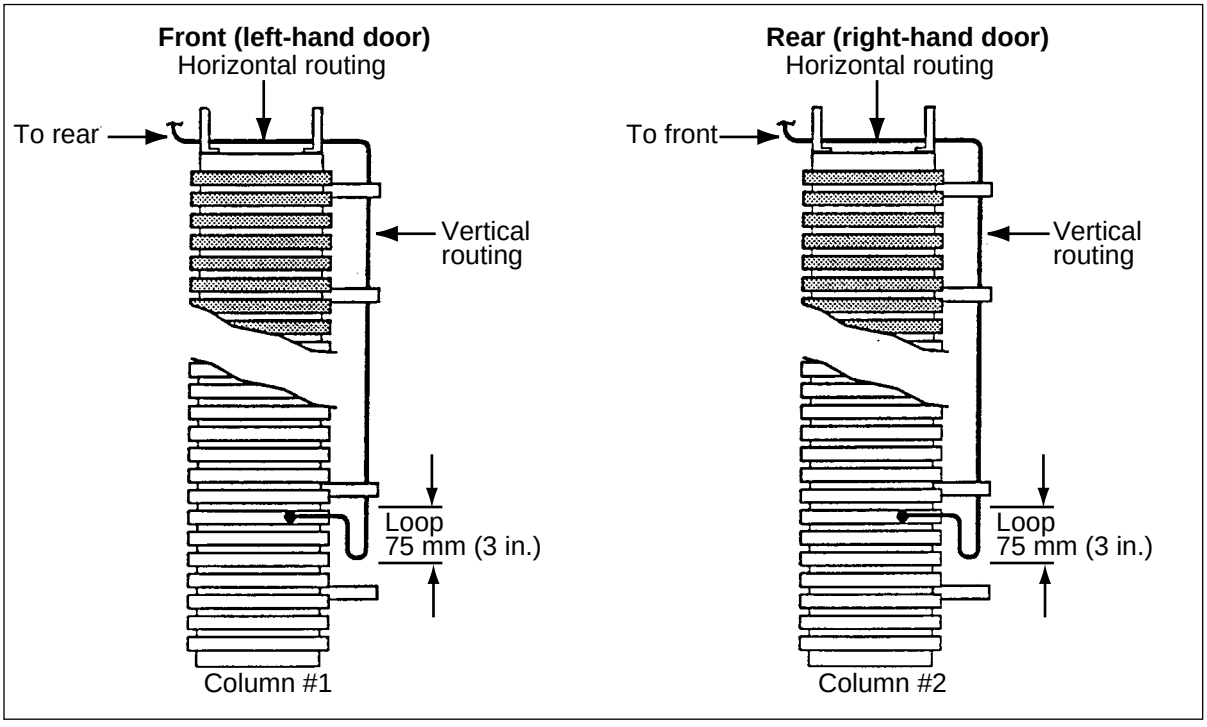

Figure 6-6
Cross-connection – multi-party service

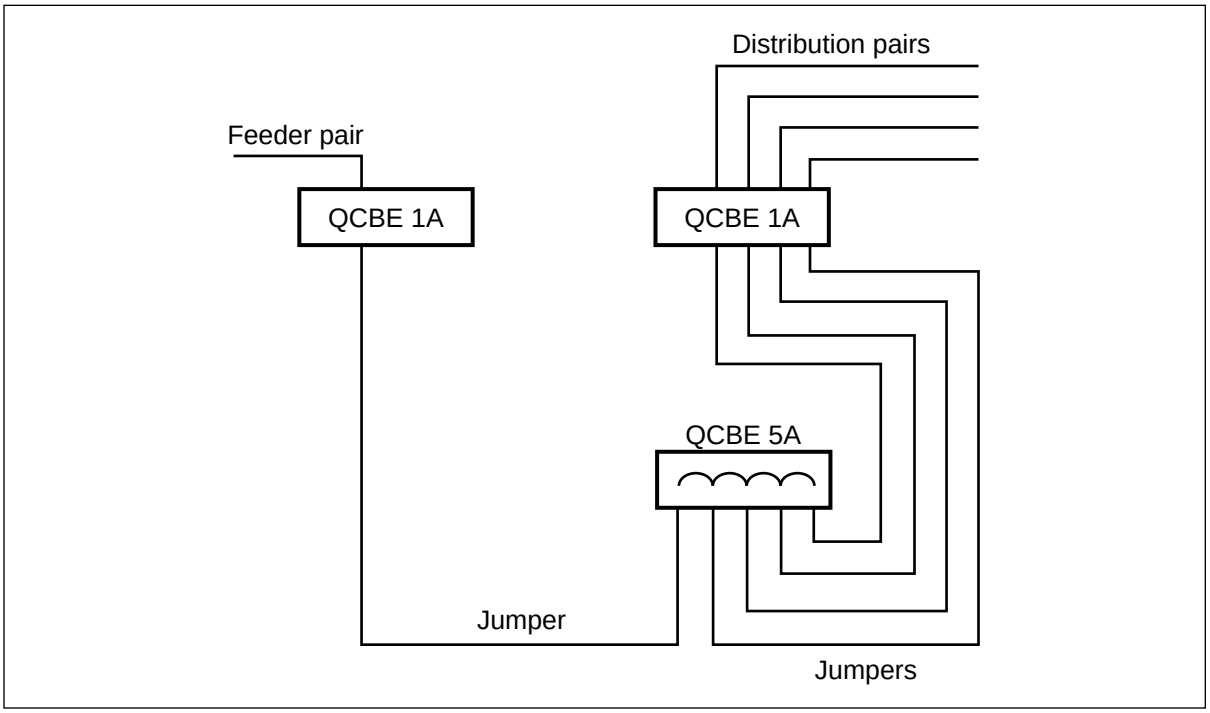

Figure 6-7
Cross-connection – multi-party service, with bridge lifters

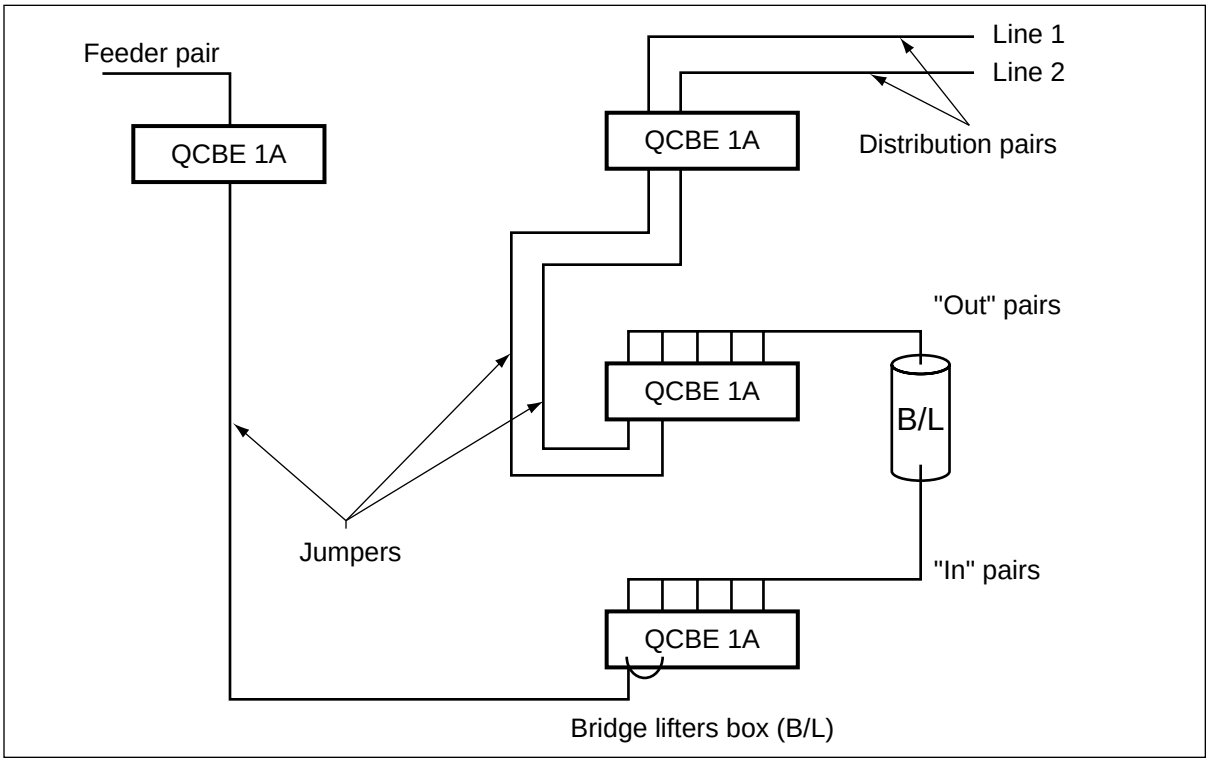

Use of special service guard

Installation and removal

Install GMOXS23A guards at the connector pair slots specified, by centering the guard over the pair splitter (Figure 7-1). Remove the guard by pulling it away from the connector.

Figure 7-1
GMOXS23A special service guard

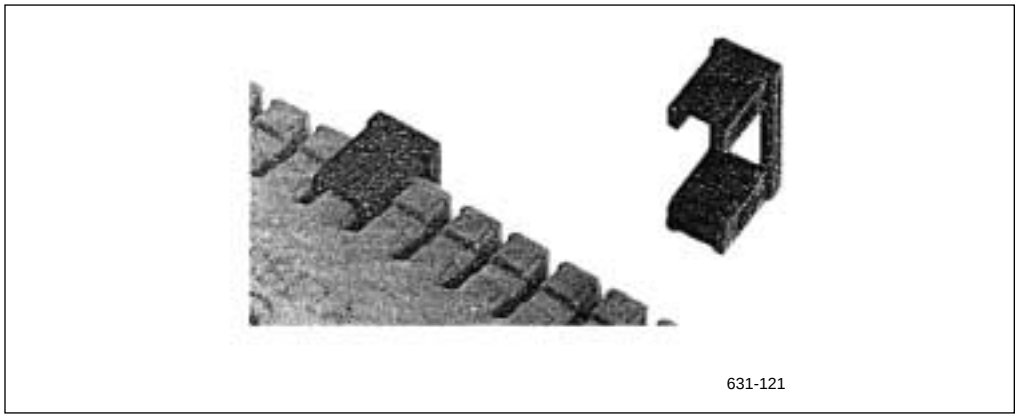

Testing

Single-pair testing

Insert the TMOXSl7A test probe into the connector by centering the probe over the pair splitter. To test individual conductors, use either the metal lugs at top and bottom of the test probe, or the alligator clips. When the test probe is correctly installed, RED (right) indicates Ring, and BLACK (left) indicates Tip.

> ***Note:*** Use additional test probes to test more than one circuit at a time (including adjacent pairs).

25-pair testing

Test shoe

Insert the TM0XS21A test shoe into the connector. Check that the spring clips at each end of the shoe are fully engaged in the retainer. Connect the 25-pair Cinch-Jones connector to the appropriate test set.

Test connector

Insert the TMOXS22A test connector Into the connector. Check that the spring clips at each end of the shoe are fully engaged in the retainer. With the test connector in position, the top row of contacts access the Tip appearances, and the bottom row access the Ring appearances.

Servicing

Chart 9-1
Connector and retainer replacement, without service interruption

Note: For retainer replacement only, follow steps 1, 2 and 12.

Step	Procedure
1	Remove connector/retainer from mounting column. Remove jumper wires from fanning slot.
2	Cut and remove cable tie. Remove connector from retainer by disengaging retainer tabs. (Use tools shown or splicer's scissors.)
3	Fan out cable pairs.

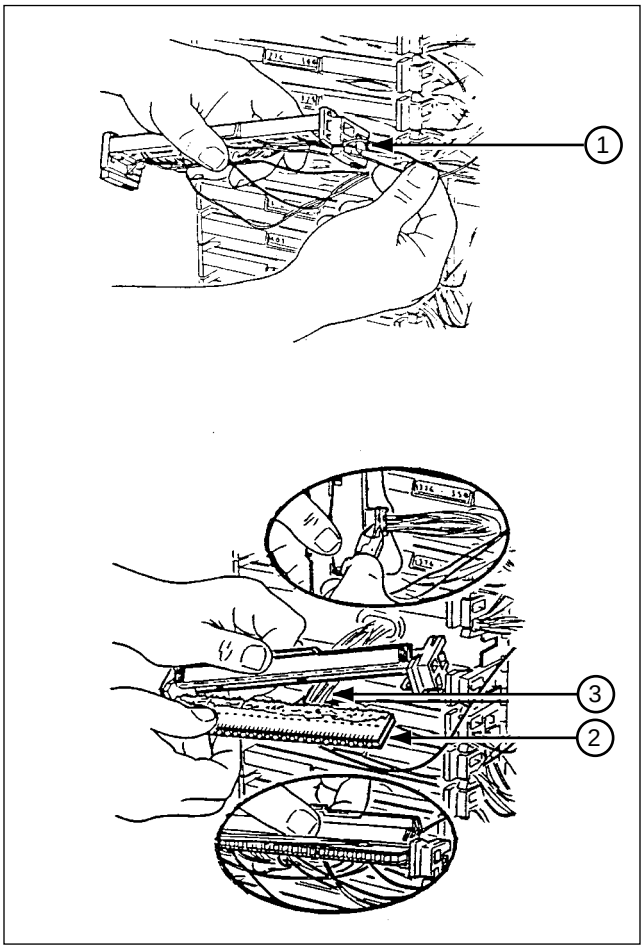

—continued—

Chart 9-1
Connector and retainer replacement, without service interruption (continued)

Step	Procedure
4	Place fixture in mounting column.
5	Place new connector fixture (cable pair slots facing up).
6	Place old connector in front of new connector with pairs fanning over new connector. (Keep approximately 1/2 in. between connectors.)
7	Align cable pairs and terminate with connection tool in No-Cut position. ***Note:*** When replacing the connectors in the top four mounting positions on the column, hold the head of the fixture at 45° while terminating.
8	Remove new connector from fixture. Rotate both connectors 180°. Holding both connectors, align and insert the jumper wires. Terminate wire in new connector with connection in Cut position and connector supported on fixture.

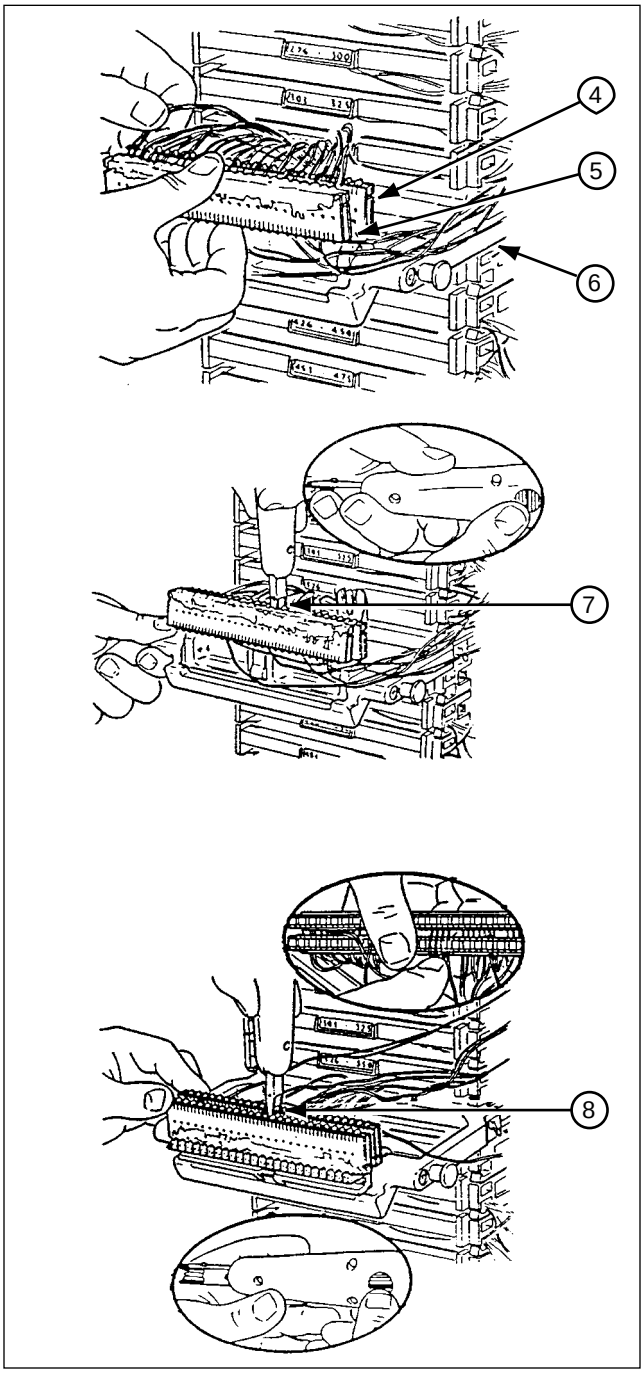

—continued—

Chart 9-1
Connector and retainer replacement, without service interruption (end)

Step	Procedure
9	Rotate connectors back to previous position and terminate cable pairs on new connector with the connection tool in the Cut position.
10	Discard old connector.
11	Remove fixture.
12	Install new retainer. Replace jumpers in fanning slot. Replace cable tie using long nosed pliers or splicer's scissors. Replace retainer in mounting column. Replace designation label

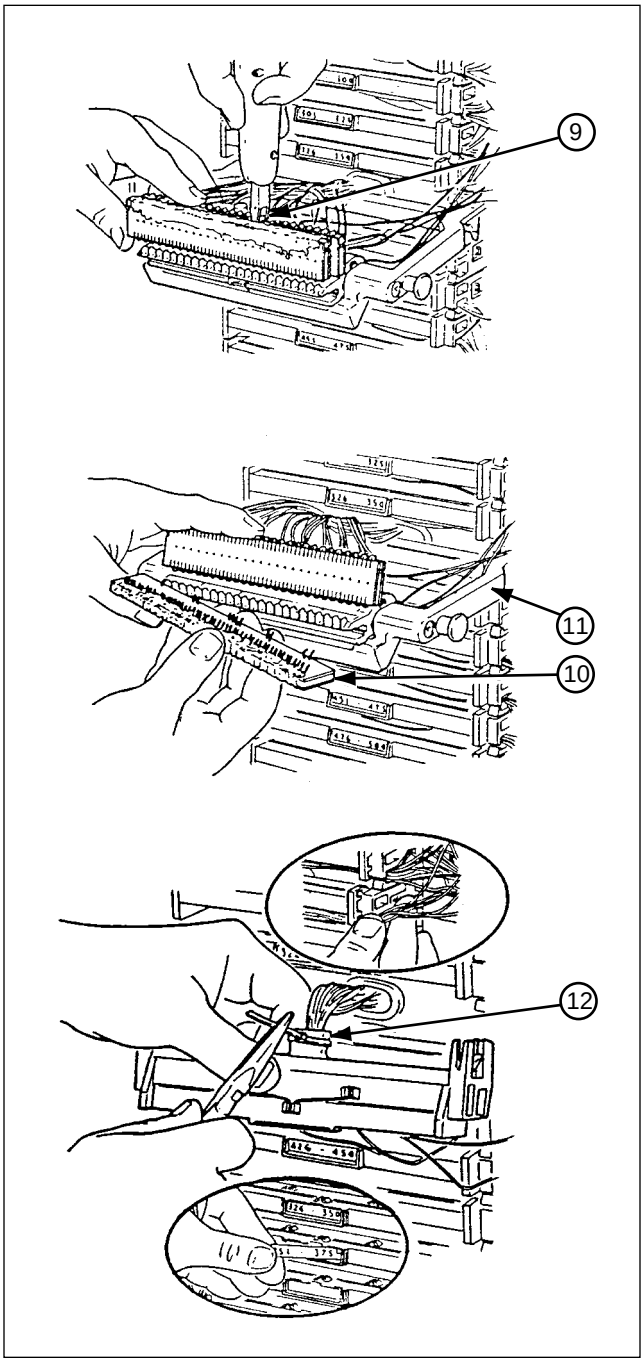

CORNING

Discovering Beyond Imagination

MOXS™ Outdoor Cross-connect System

Compact Outdoor Cross-connect System

Installation, Testing and Servicing

Publication number: 631-3511-200
Document status: Standard
Document release: 03.00
Date: June 2002

Corning Cable Systems welcomes your comments concerning this Standard Recommended Procedure. You may send your comments to the following address:

Technical Publications Department
Corning Cable Systems
9275 Denton Highway
Keller, TX 76248 USA

You may also submit comments via email to:

KPTechPubs@Corning.com

Corning Cable Systems reserves the right to improve, enhance, and modify the features and specifications of Corning Cable Systems' products without prior notification.

MOXS is a trademark of Corning Cable Systems LLC. All other trademarks are property of their respective holders. Corning Cable Systems is certified ISO 9001.
©2002 Corning Cable Systems LLC. All rights reserved.

Corning Cable Systems LLC
PO Box 489
Hickory, NC 28603-0489 USA
FAX: 828-325-5060
International: 828-901-5000
http://www.corning.com/cablesystems